INTERNAL CYCLE COUNTER

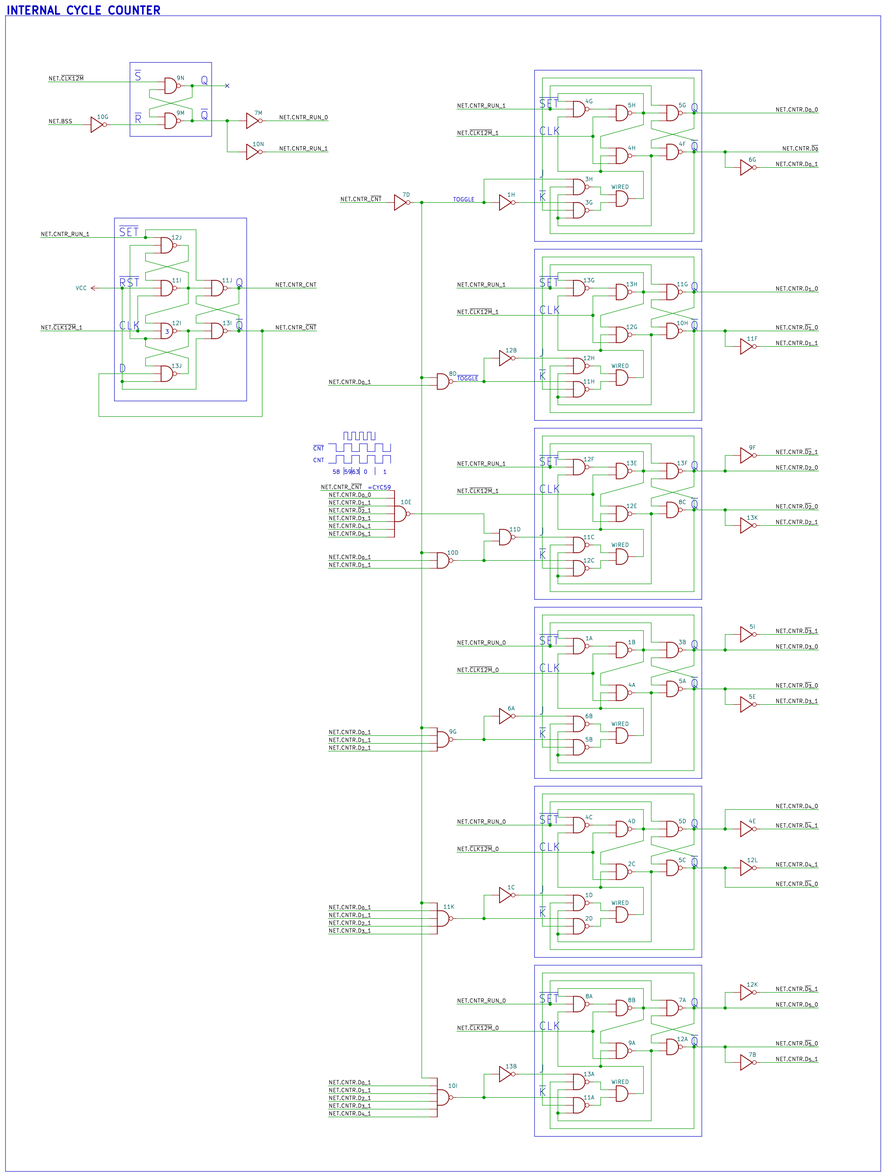

MB3908 SENSE AMPLIFIER TIMINGS

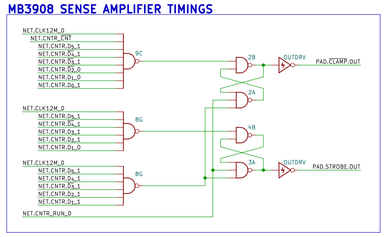

MB3910 FUNCTION DRIVER TIMINGS

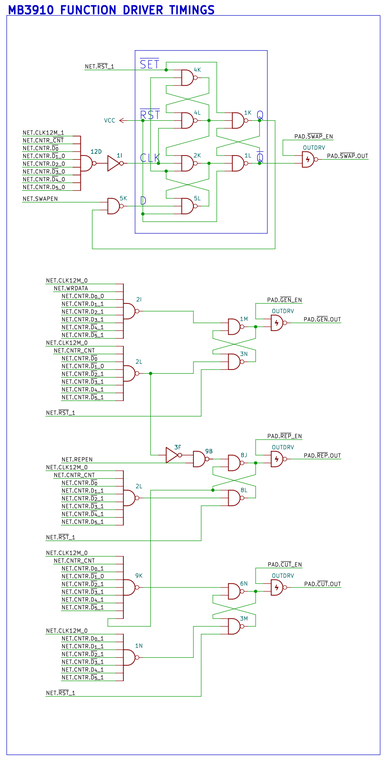

MB466 COIL DRIVER TIMINGS

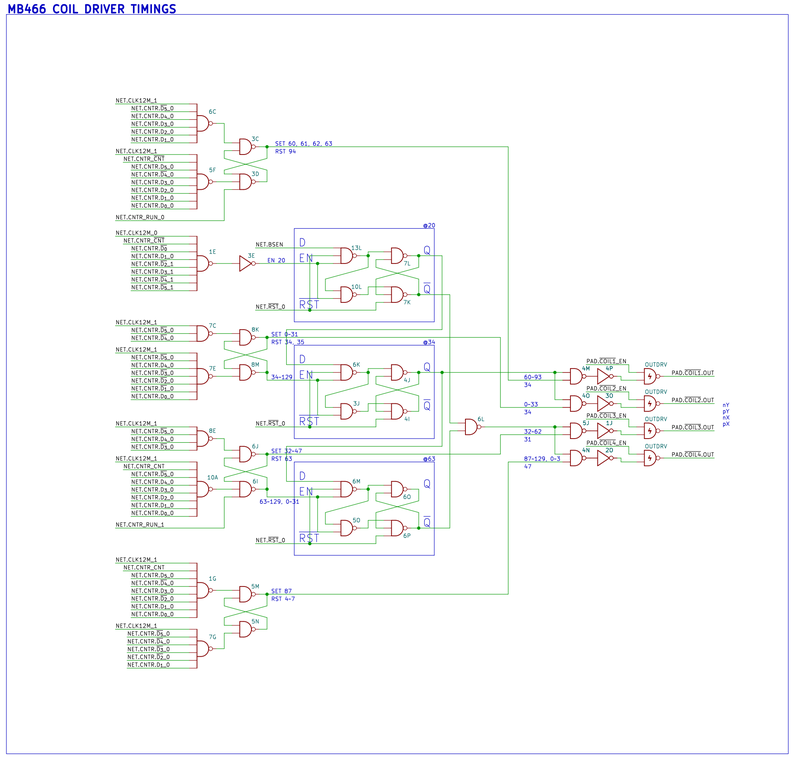

BUBBLE MEMORY CONTROLLER CLOCK GENERATOR

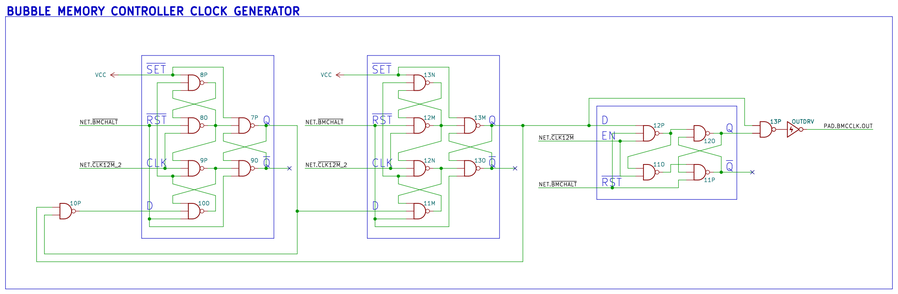

IO DRIVERS/CLOCK TREE/BUFFERS

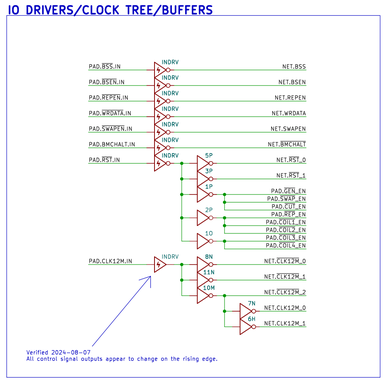

OMAKE: FUJITSU MB14000 BIPOLAR GATE ARRAY DFF/JKFF MACROS (CIRCUITS FROM THE OFFICIAL DATASHEET)

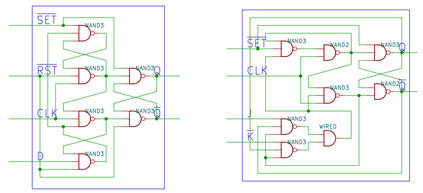

Fujitsu 1Mb Bubble Memory Timing Generator **IKA Microelectronics Co., Inc.** Sheet: / File: MB14506.kicad_sch		
Title: MB14506		
Size: A1	Date: 2024-08-07	**Rev: v1.2**
KiCad E.D.A. eeschema 7.0.6		Id: 1/1