INTERNAL CYCLE COUNTER

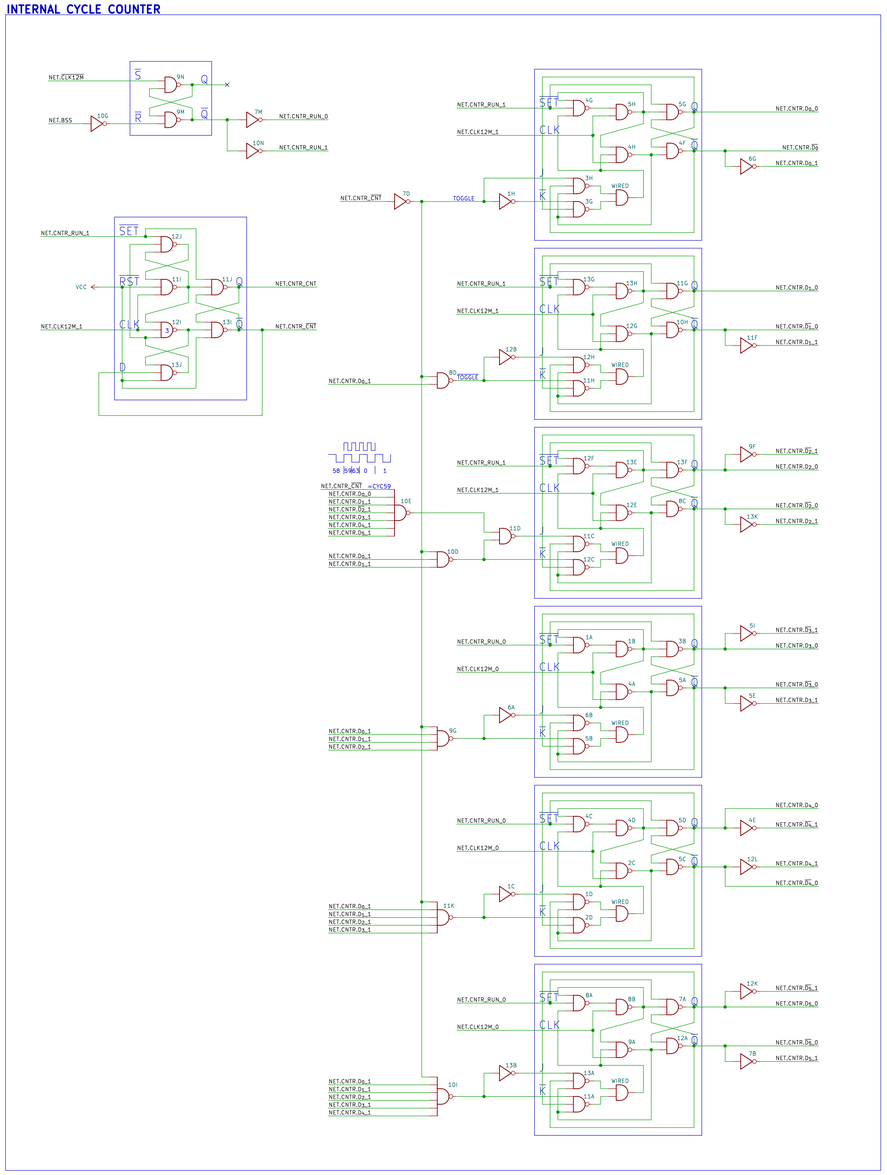

MB3908 SENSE AMPLIFIER TIMINGS

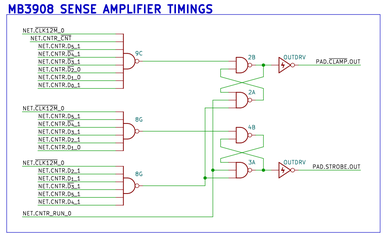

MB3910 FUNCTION DRIVER TIMINGS

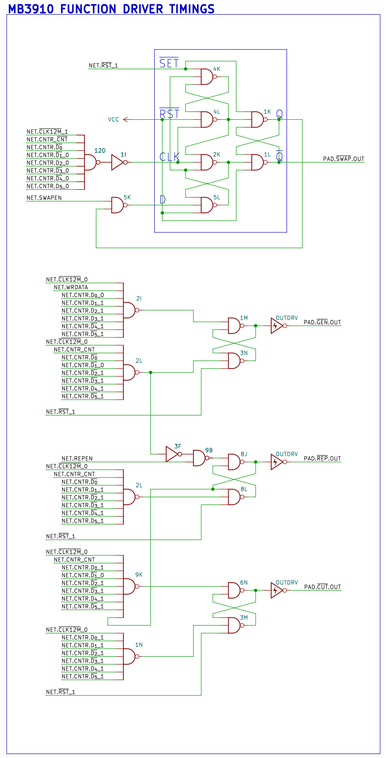

MB466 COIL DRIVER TIMINGS

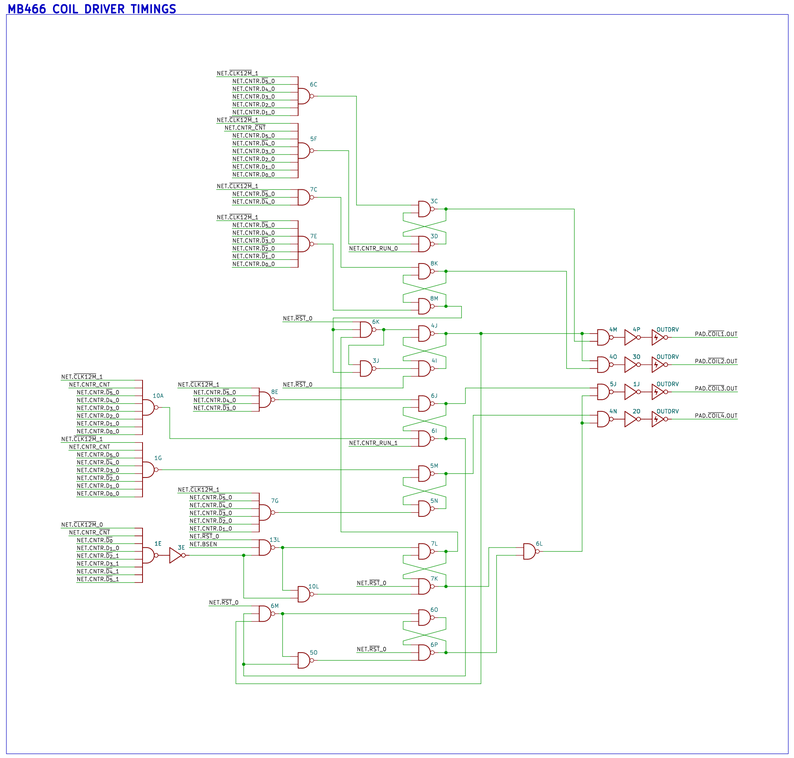

BUBBLE MEMORY CONTROLLER CLOCK GENERATOR

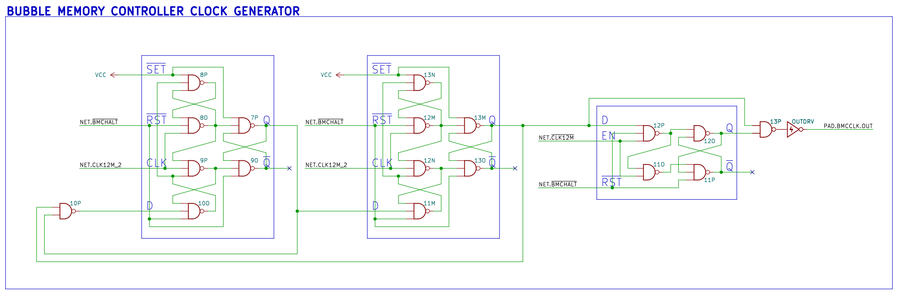

IO DRIVERS/CLOCK TREE/BUFFERS

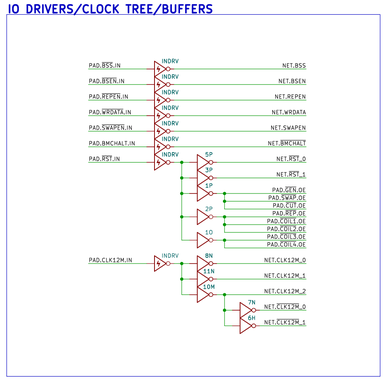

OMAKE: FUJITSU MB14000 BIPOLAR GATE ARRAY DFF/JKFF MACROS (CIRCUITS FROM THE OFFICIAL DATASHEET)

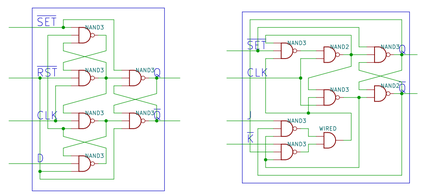

IKA Victor Co., Inc.	
Sheet: /	
File: MB14506.kicad_sch	
Title: MB14506 Fujitsu 1Mb Bubble Memory Timing Generator	
Size: A1 | Date: 2023-08-27	Rev: v1.0
KiCad E.D.A. eeschema 7.0.6	Id: 1/1