INTERNAL CLOCK DIVIDER

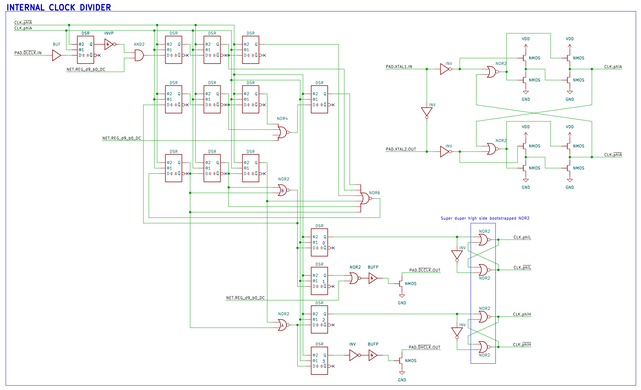

REG0

File: REG0.kicad_sch

M1

File: M1.kicad_sch

C1

File: C1.kicad_sch

X1

File: X1.kicad_sch

IKA Microelectronics Inc.
Sheet: /
File: V9958.kicad_sch

Title: V9958

Size: A2	Date: 2024-09-13	Rev: WIP
KiCad E.D.A. eeschema 7.0.6		Id: 1/5

REGNUM_OE CONTROL

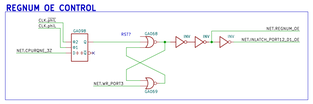

REGNUM_LD/INC CONTROL

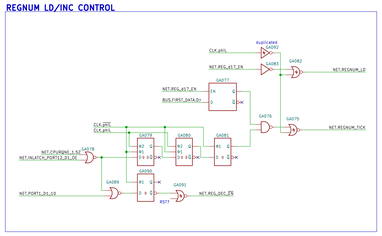

REGISTER NUMBER

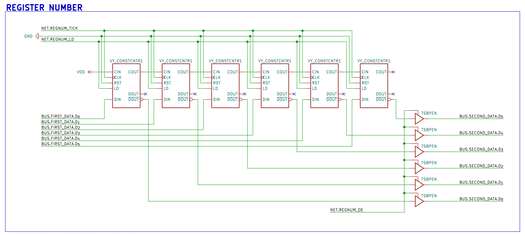

PALETTERAM ADDRESS COUNTER

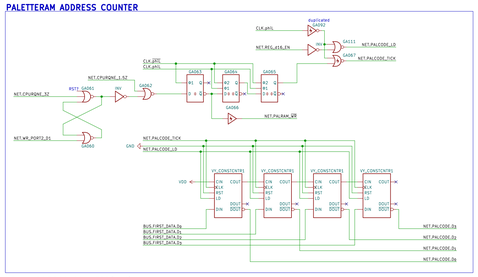

VRAM ADDRESS COUNTER(VAC)

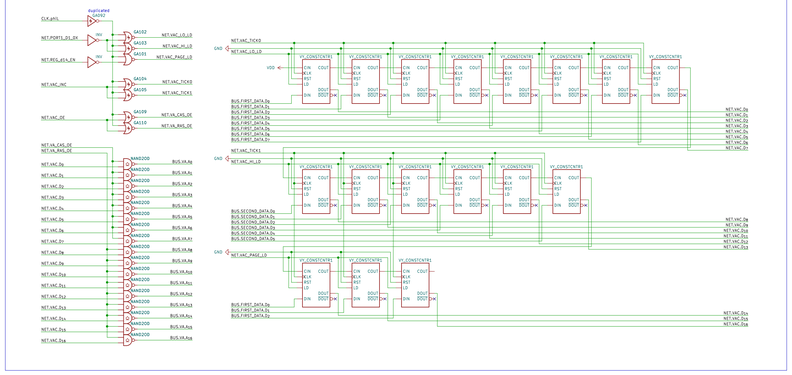

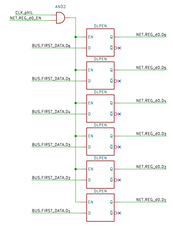

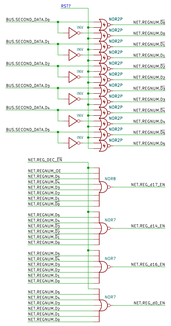

IKA Microelectronics Inc.
Project: V9958
File: REGISTER.sch
Title: V9958
Size: A2 Date: 2024-08-23 **Rev: VP**
KiCad (5.A. eeschema 7.0.6 Sh 2/5

VRAM ADDRESS LATCH/MUX

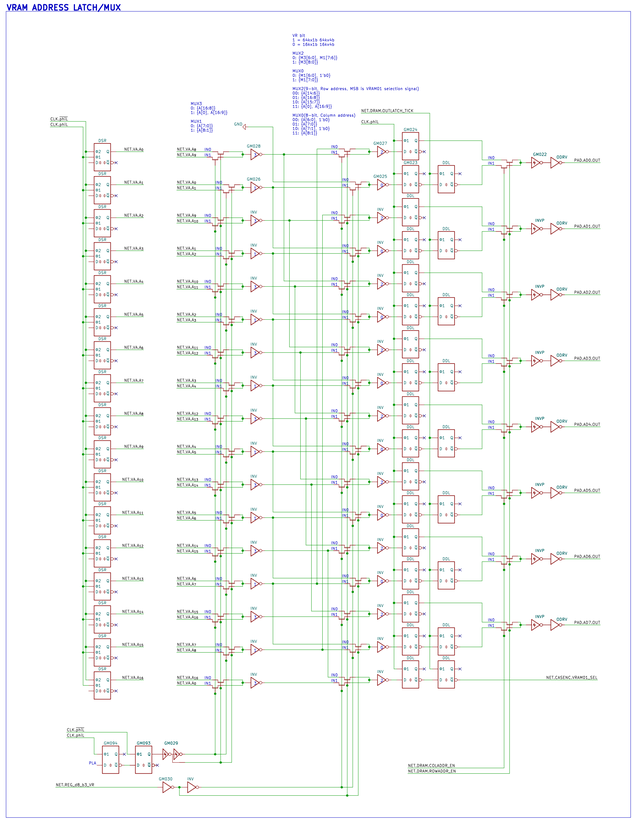

VRAM DATA INLATCH

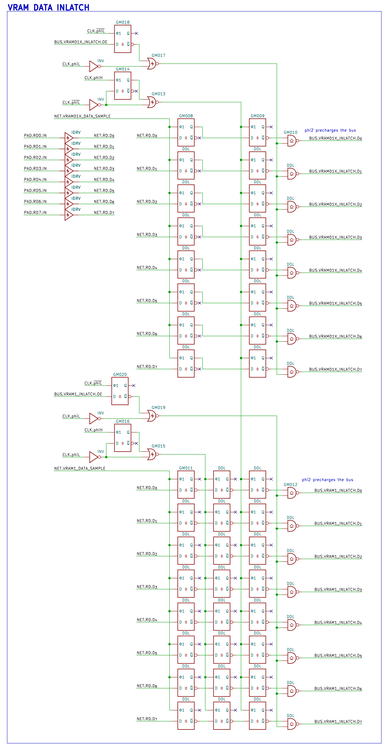

VRAM DATA OUTLATCH

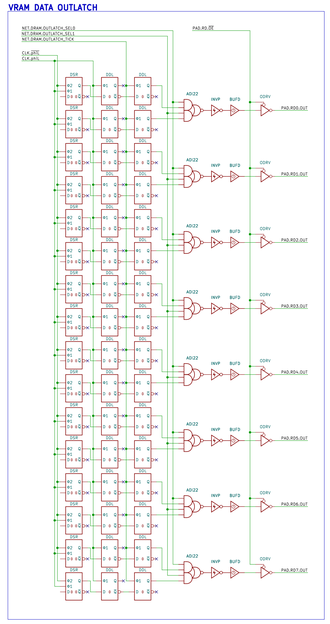

MEMORY INTERFACE CONTROL

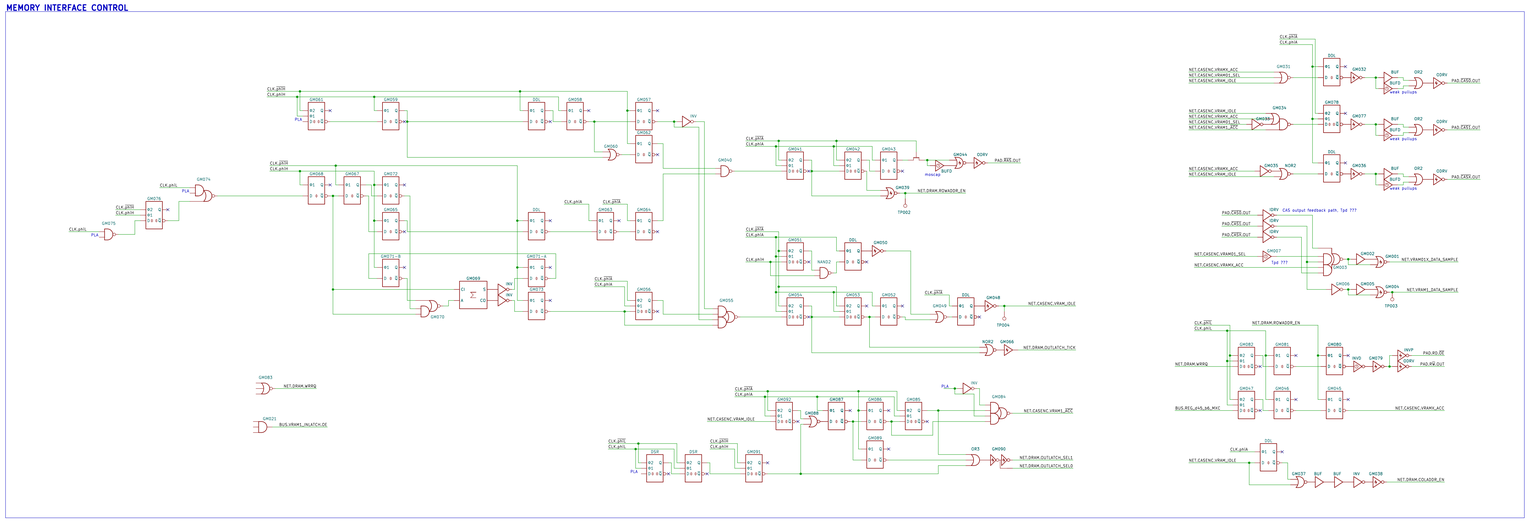

IKA Microelectronics Inc.	
Sheets: 1	
Sheet: 1/stand.sch	
Title: V9958	
Size: A3 Date: 2025-08-23	Rev: WIP
KiCad E.D.A. eeschema 7.0.6	Id: 3/5

CPU R/W REQUEST SYNCHRONIZER

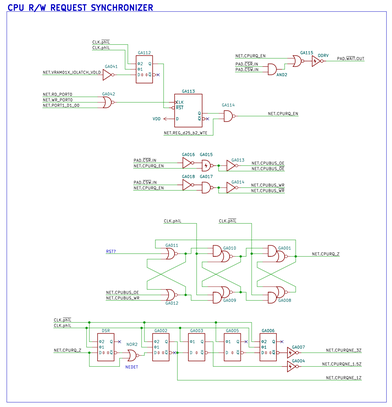

INLATCH(TEMPORARY REGISTER) ENABLE GENERATOR

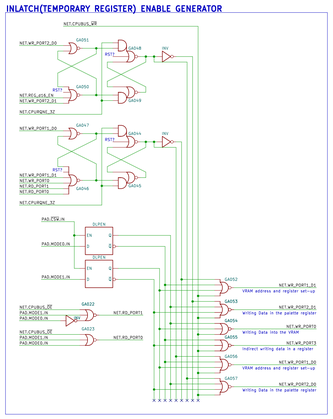

FIRST BYTE INLATCH(PORT123)

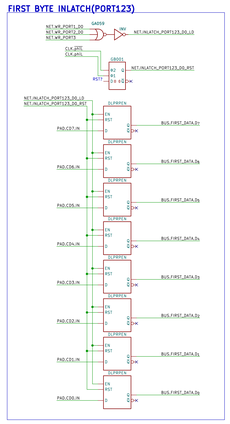

SECOND BYTE INLATCH(PORT12)

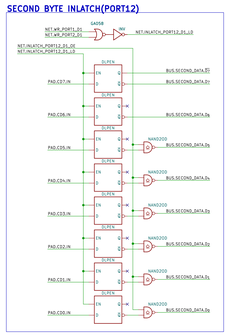

PORT1 ACCESS TYPE DECODER

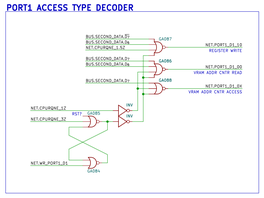

VRAM01X IOLATCH(CPU<->VRAM)

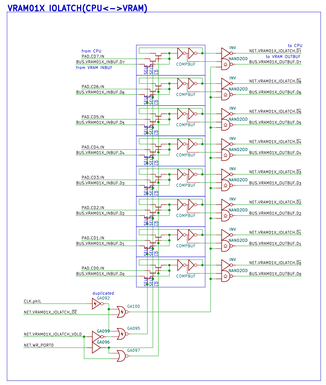

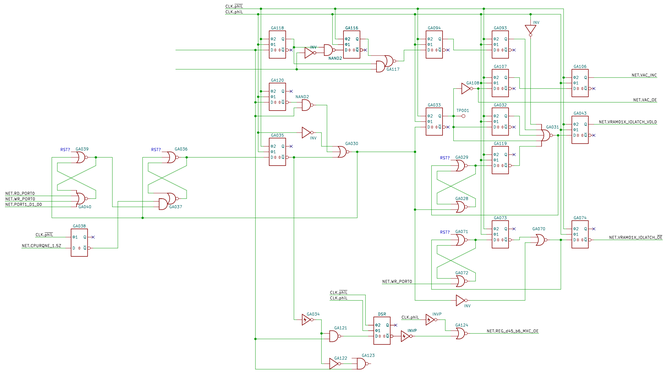

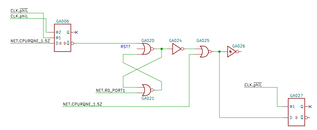

IKA Microelectronics Inc.
Sheet: /CLV
File: Clsload.sch

Title: Y9958

Size: A3	Date: 2025-08-23	Rev WIP
KiCad E.D.A. eeschema 7.0.6		Id: 4/5

IKA Microelectronics Inc.
Sheet: /V1/
File: V1Aload.sch

Title: V9958

Size: A3	Date: 2024-08-24	Rev: WIP
KiCad E.D.A. eeschema 7.0.6		Id: 5/5