INTERNAL CLOCK DIVIDER

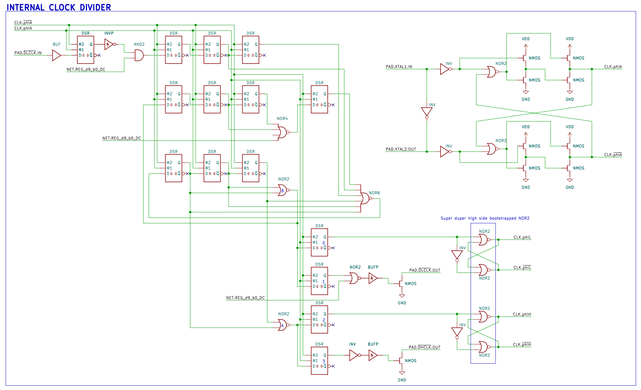

REG0

File: REG0.kicad_sch

w/: **IKA Microelectronics Inc.** Sheet: / File: V9958.kicad_sch	
Title: V9958	
Size: A3 Date: 2024-07-16 KiCad E.D.A. eeschema 7.0.6	**Rev:** id: 1/2

INLATCH(TEMPORARY REGISTER) ENABLE GENERATOR

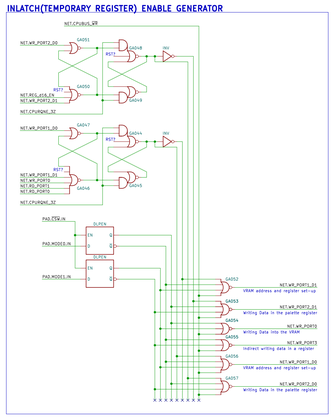

REGNUM OE CONTROL

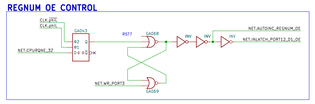

REGISTER NUMBER

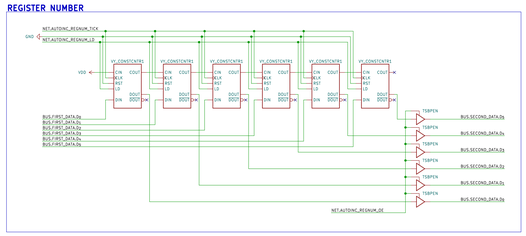

REGNUM LD/INC CONTROL

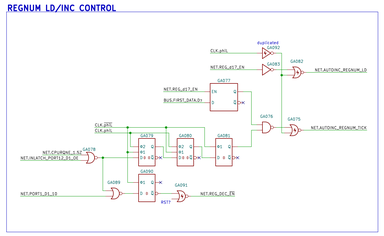

FIRST BYTE INLATCH(PORT123)

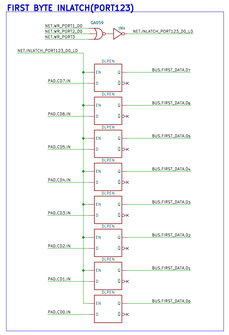

SECOND BYTE INLATCH(PORT12)

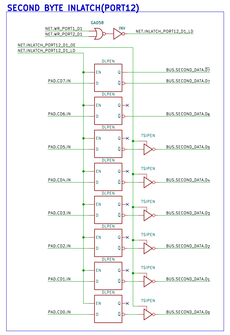

PORT1 ACCESS TYPE DECODER

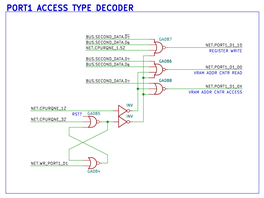

CPU R/W REQUEST SYNCHRONIZER

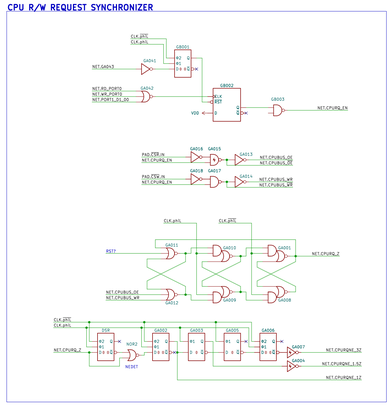

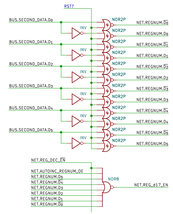

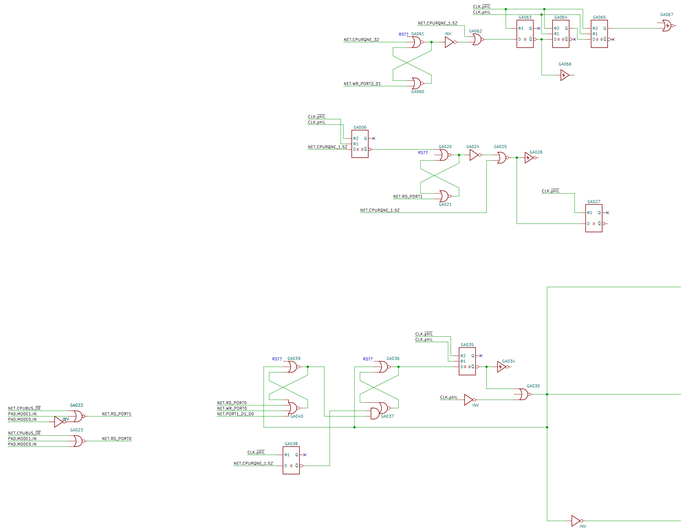

WIP
IKA Microelectronics Inc.
Sheet /REGOUT
Sheet file: REGOUT.sch

Title: V9958

Size: A2	Date: 2024-07-16	Rev:
KiCad 7.0.6, eeschema 7.0.6		0.2.2