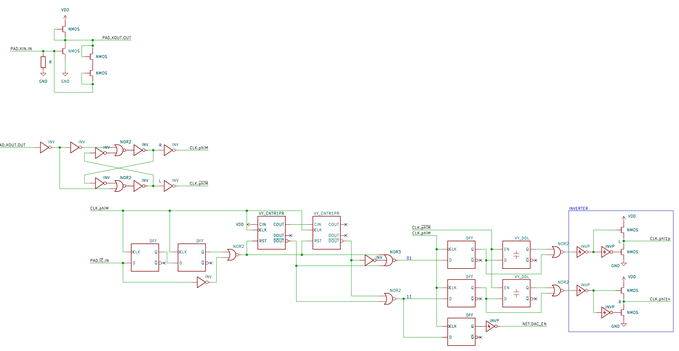

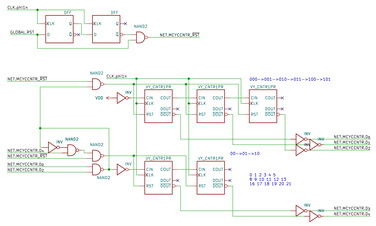

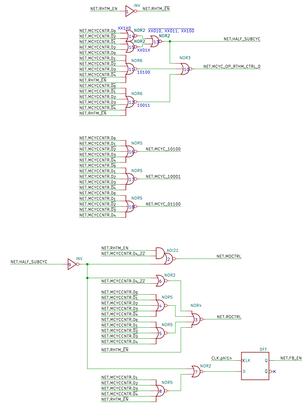

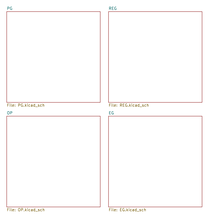

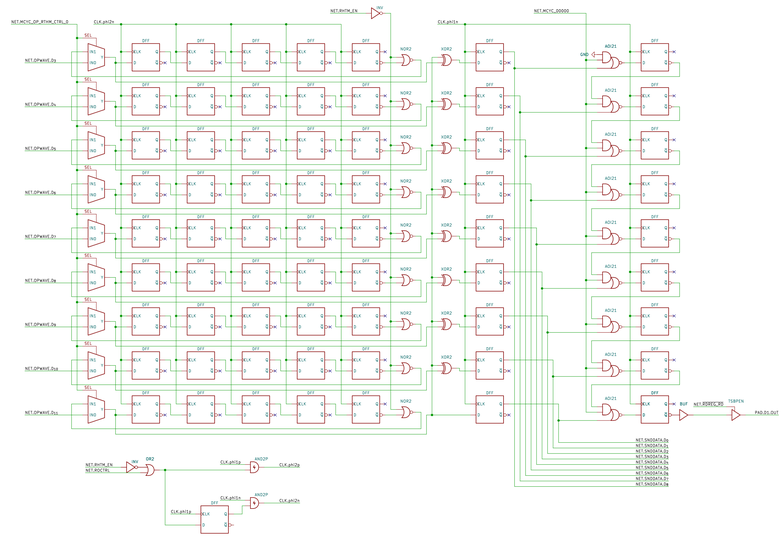

YM2413 DAC TOPOLOGY

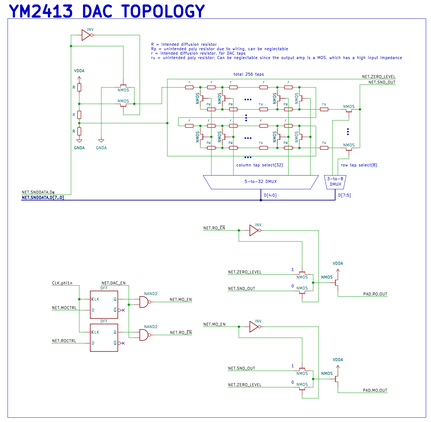

Note: Diffusion resistor
R = Intended diffusion resistor
r = Intended diffusion resistor due to wiring, can be negligeable
r.e Intended diffusion resistor for DAC taps
rs = unintended poly resistor: Can be negligeable since the output amp is a MOS, which has a high input impedance

IKA Microelectronics
Sheet: /
File: YM2413.kicad_sch

Title: YM2413

Size: A3	Date: 2024-05-17	Rev: v1.0
KiCad E.D.A. eeschema 7.0.6		Id: 1/5

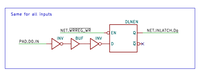

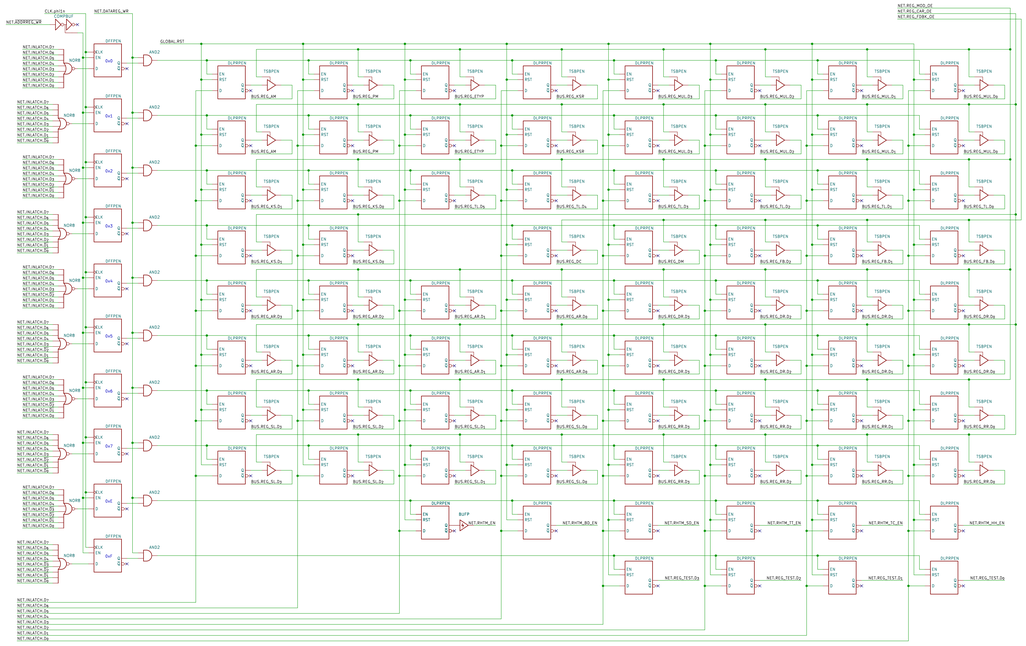

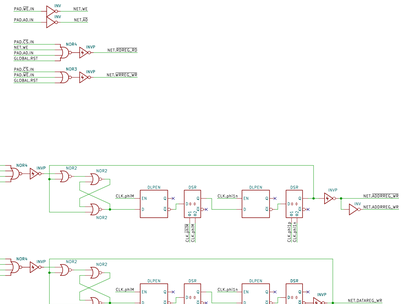

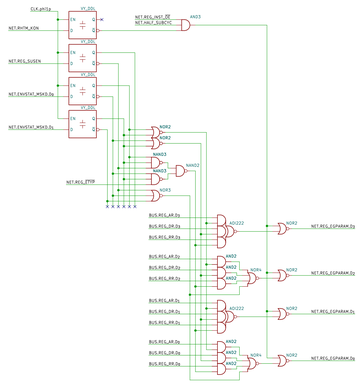

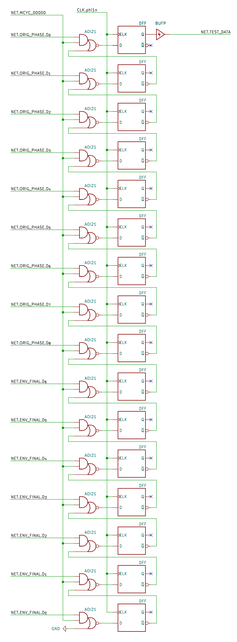

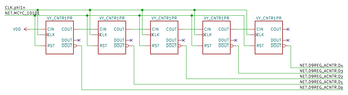

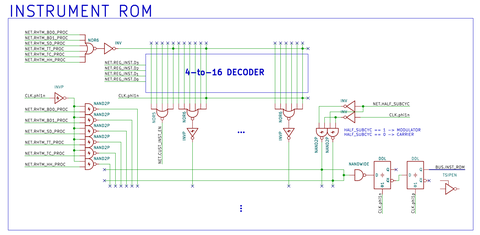

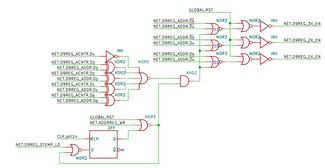

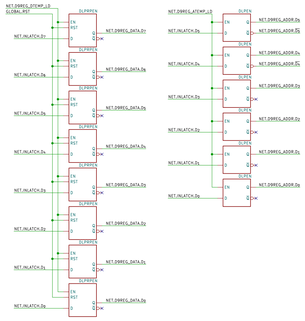

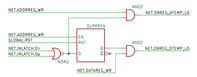

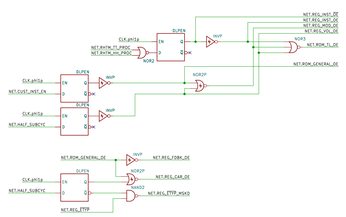

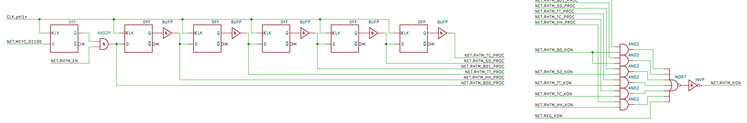

D9REGs

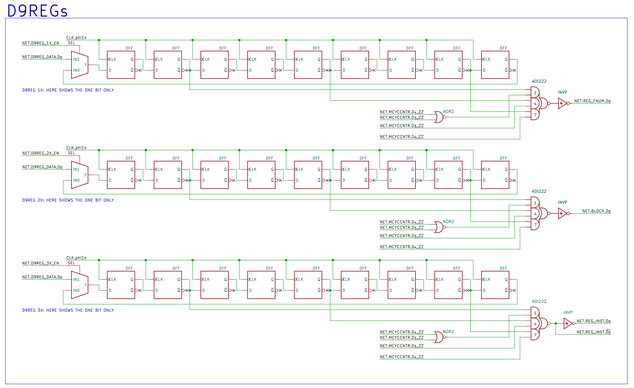

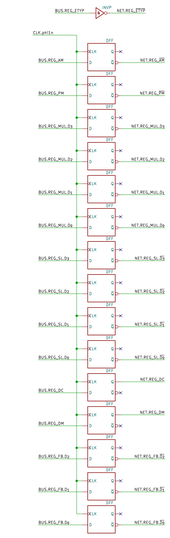

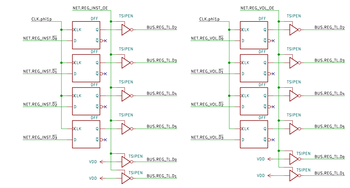

IKA Microelectronics
Sheet: /REG/
File: REGs16ad_sch

Title: YM2413

Size: A2	Date: 2024-06-25	Rev: v1.1
KiCad E.D.A. eeschema 7.0.6		Id: 2/9

VIBRATO(PHASE)

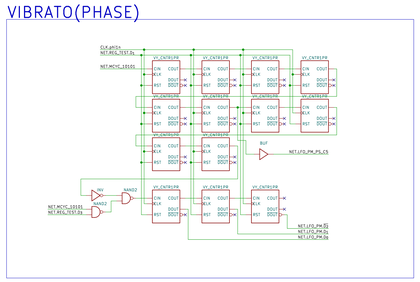

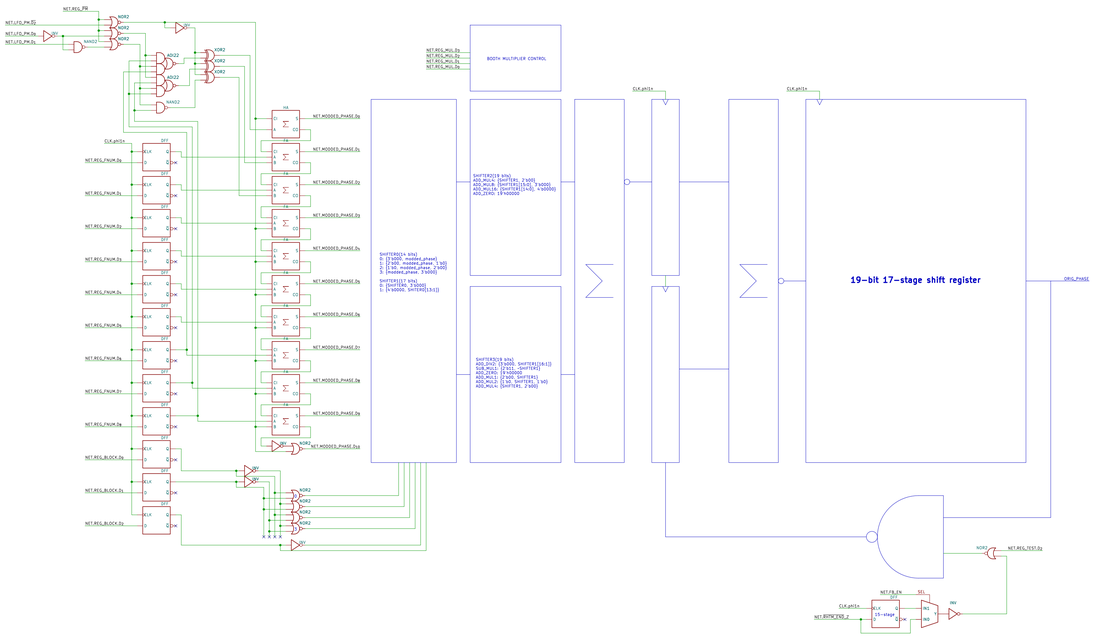

PERCUSSION PHASE GENERATOR/PHASE SELECTOR

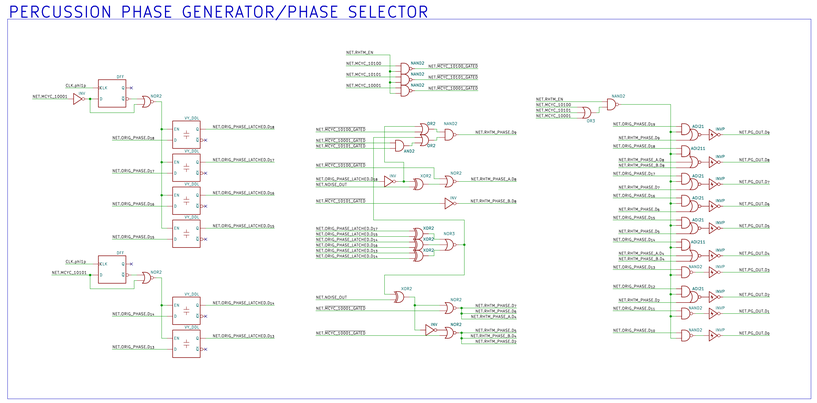

NOISE LFSR

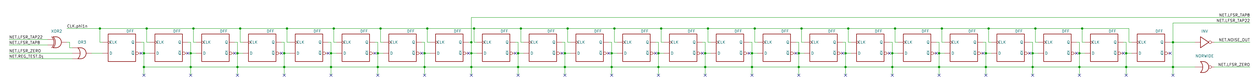

IKA Microelectronics
Sheet: /PSU/
File: PS_Vibrato.sch

Title: YM2413

Size: A0	Date: 2024-05-17	Rev: v1.0
KiCad 8.0.4	eeschema 7.0.0	Id: 1/1

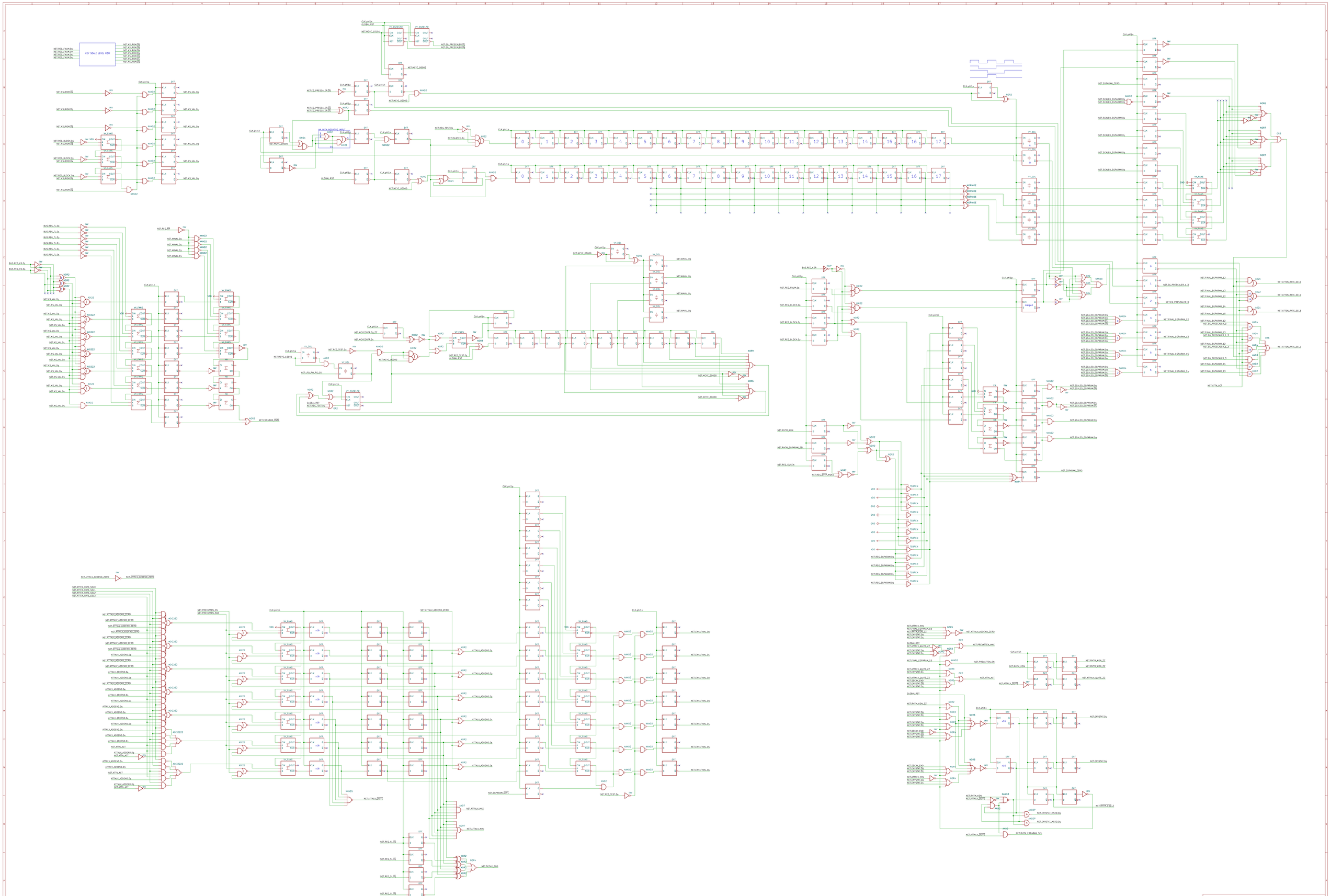
KEY SCALE LEVEL ROM
NET.KSLROM.D0
NET.KSLROM.D1
NET.KSLROM.D2
NET.KSLROM.D3
NET.KSLROM.D4
NET.KSLROM.D5
NET.KSLROM.D6
NET.KSLROM.D7
NET.REG.FNUM.Da
NET.REG.FNUM.Db
NET.REG.FNUM.Dc
NET.REG.FNUM.Dd
NET.REG.BLOCK.Da
NET.REG.BLOCK.Db
NET.REG.BLOCK.Dc
NET.REG.BLOCK.Dd
NET.KS.VAL.D0
NET.KS.VAL.D1
NET.KS.VAL.D2
NET.KS.VAL.D3
NET.KS.VAL.D4
NET.KS.VAL.D5
NET.KS.VAL.D6
NET.KS.VAL.D7
NET.KS.VAL.D8
NET.KS.VAL.D9
NET.KS.VAL.Da
NET.KS.VAL.Db
NET.KS.VAL.Dc
NET.KS.VAL.Dd
NET.KS.VAL.De
NET.KS.VAL.Df
NET.EG.PRESCALER.D0
NET.EG.PRESCALER.D1
NET.EG.PRESCALER.D2
NET.EG.PRESCALER.D3
NET.MCYC.00000
NET.MCYC.20000
NET.MCYC.10101
NET.REG.TEST.Da
NET.MLATCH.Da
NET.ESPARAM.ZERO
NET.SCALED.ESPARAM.Da
NET.SCALED.ESPARAM.Db
NET.SCALED.ESPARAM.Dc
NET.SCALED.ESPARAM.Dd
NET.SCALED.ESPARAM.De
NET.SCALED.ESPARAM.Df
NET.SCALED.ESPARAM.D0
NET.SCALED.ESPARAM.D1
NET.SCALED.ESPARAM.D2
NET.SCALED.ESPARAM.D3
NET.FINAL.ESPARAM.12
NET.FINAL.ESPARAM.13
NET.FINAL.ESPARAM.14
NET.FINAL.ESPARAM.15
NET.EG.PRESCALER.R_3
NET.EG.PRESCALER.R_2
NET.EG.PRESCALER.R_1
NET.EG.PRESCALER.R_0
NET.ATTEN.RATE.SEL0
NET.ATTEN.RATE.SEL1
NET.ATTEN.RATE.SEL2
NET.ATTEN.RATE.SEL3
NET.ATTEN.ACT
NET.AMVAL.D0
NET.AMVAL.D1
NET.AMVAL.D2
NET.AMVAL.D3
NET.MCYCCNTR.D0
NET.MCYCCNTR.D1
NET.MCYCCNTR.D2
NET.MCYCCNTR.D3
NET.LFO_PM_PS_CS
NET.ESPARAM_POPT
NET.RHTM.KON
NET.RHTM.ESPARAM.SEL
NET.REG.SUSEN
NET.REG.TPTP.WS2
NET.REG.ESPARAM.D0
NET.REG.ESPARAM.D1
NET.REG.ESPARAM.D2
NET.REG.ESPARAM.D3
NET.ATTNLV.ADDEND.ZERO
NET.ATTNLV.ADDEND.D0
NET.ATTNLV.ADDEND.D1
NET.ATTNLV.ADDEND.D2
NET.ATTNLV.ADDEND.D3
NET.ATTNLV.ADDEND.D4
NET.ATTNLV.ADDEND.D5
NET.ATTNLV.ADDEND.D6
NET.ATTNLV.ADDEND.D7
NET.ATTNLV.MAX
NET.ATTNLV.MIN
NET.ATTNLV.QUITE
NET.PREVATTEN.EN
NET.PREVATTEN.MAX
NET.DECAY.END
NET.ENV.FINAL.D0
NET.ENV.FINAL.D1
NET.ENV.FINAL.D2
NET.ENV.FINAL.D3
NET.ENVSTAT.D0
NET.ENVSTAT.D1
NET.ENVSTAT.MSKD.D0
NET.ENVSTAT.MSKD.D1
NET.RHTM.KON.Z2
NET.RHTM.Z2
NET.ATTNLV.QUITE.Z2
NET.RHTM.ESPARAM.SEL
GLOBAL_RST
CLK.ph1a
CLK.ph1n
VDD
GND
IKA Microelectronics
Sheet: /1G/
File: IC.kicad_sch
Title: YM2413
Size: A3
Date: 2025-05-17
KiCad E.D.A. eeschema 7.0.6
Rev: v1.0
Id: 4/5

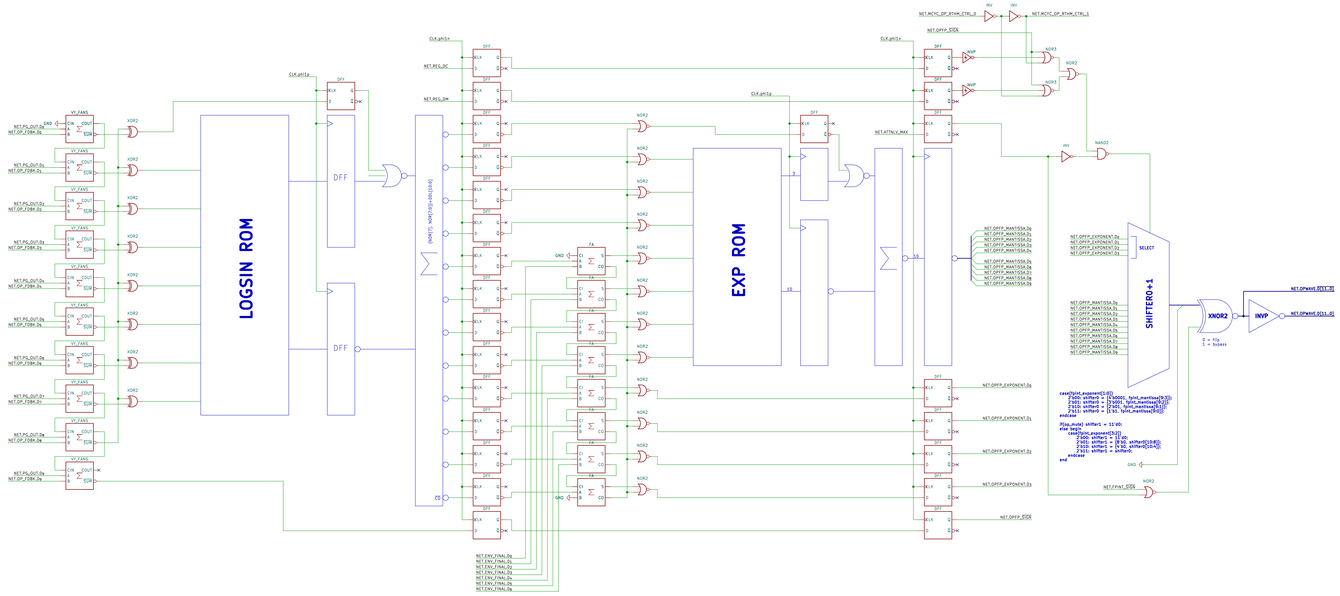

IKA Microelectronics
Sheet: /OP/
File: OP.kicad_sch

Title: YM2413

Size: A3	Date: 2025-05-17	Rev: v1.0
KiCad E.D.A. eeschema 7.0.6		Id: 5/5