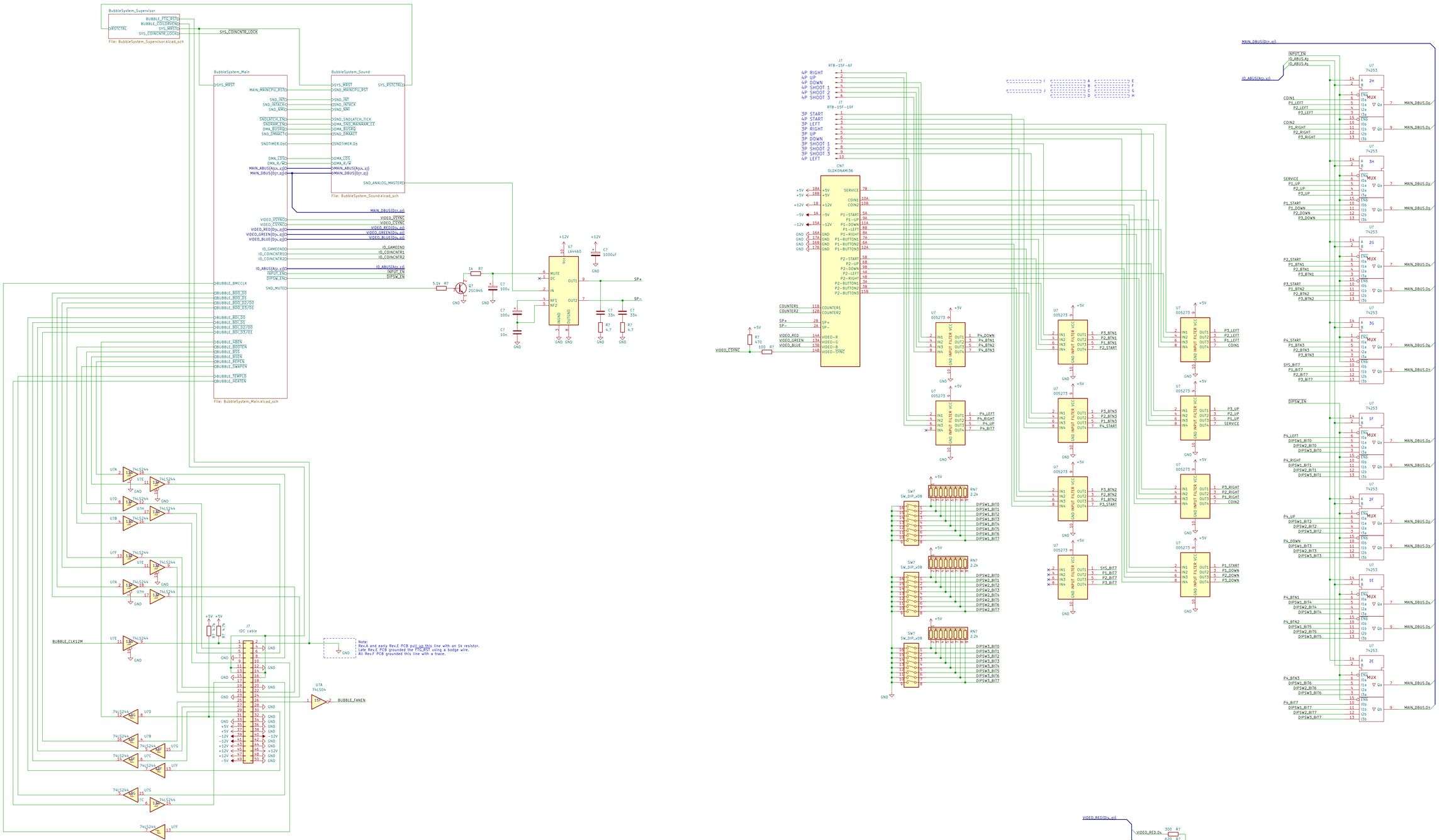

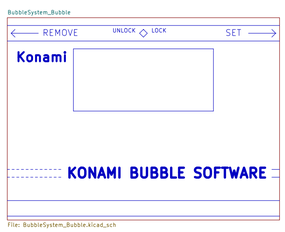

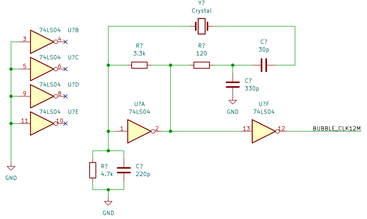

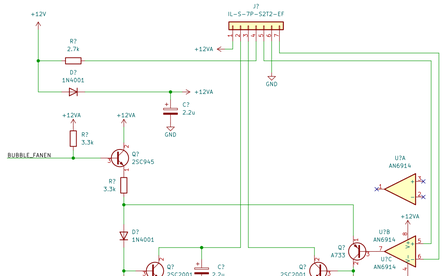

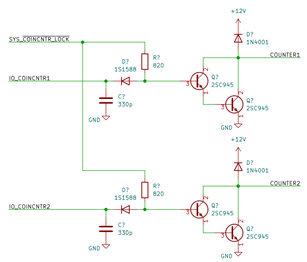

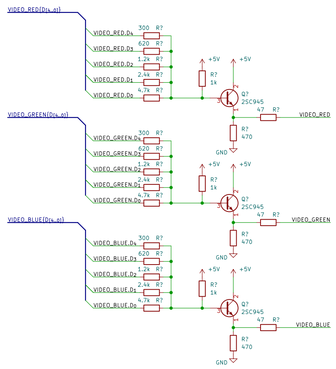

IKA Victor Co., Inc.
Sheet: /
File: BubbleSystem_top.kicad_sch
Title: Konami Bubble System
Size: A1 | Date: 2023-08-27 | Rev: v1.1
KiCad E.D.A. eeschema (6.0.0) | Id: 1/5

PCB Rev.A

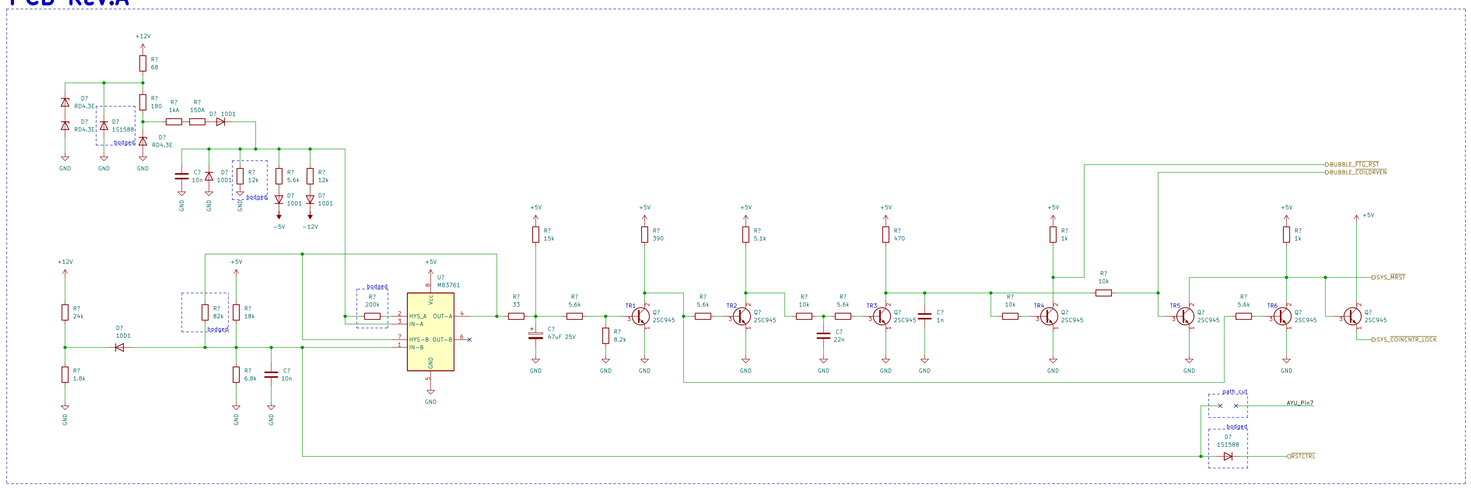

PCB Rev.E

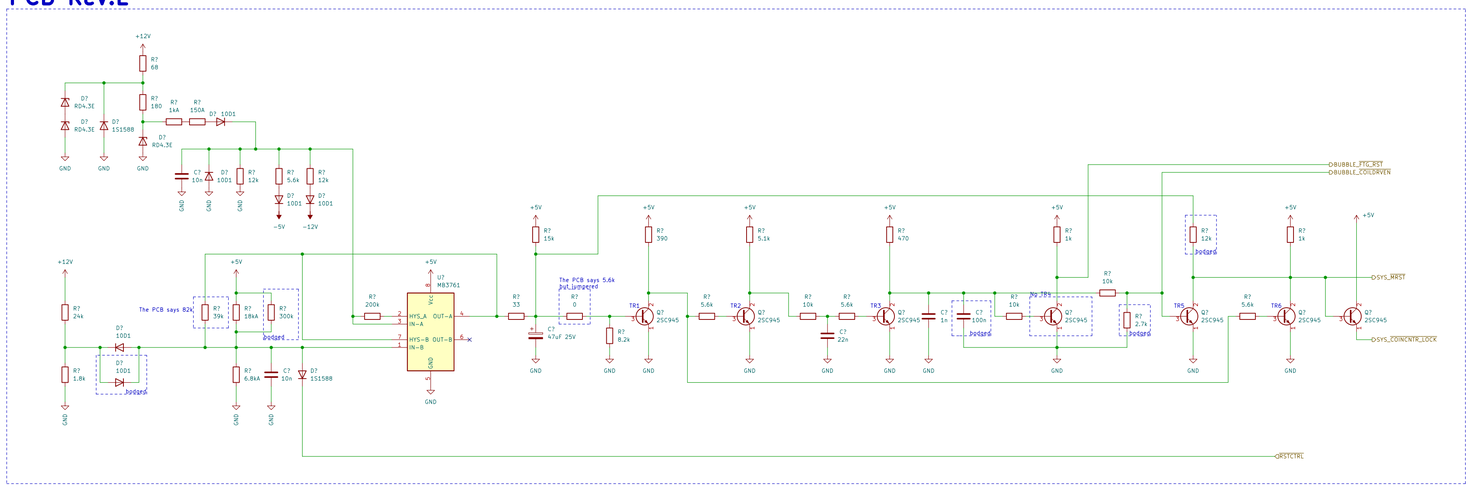

PCB Rev.F

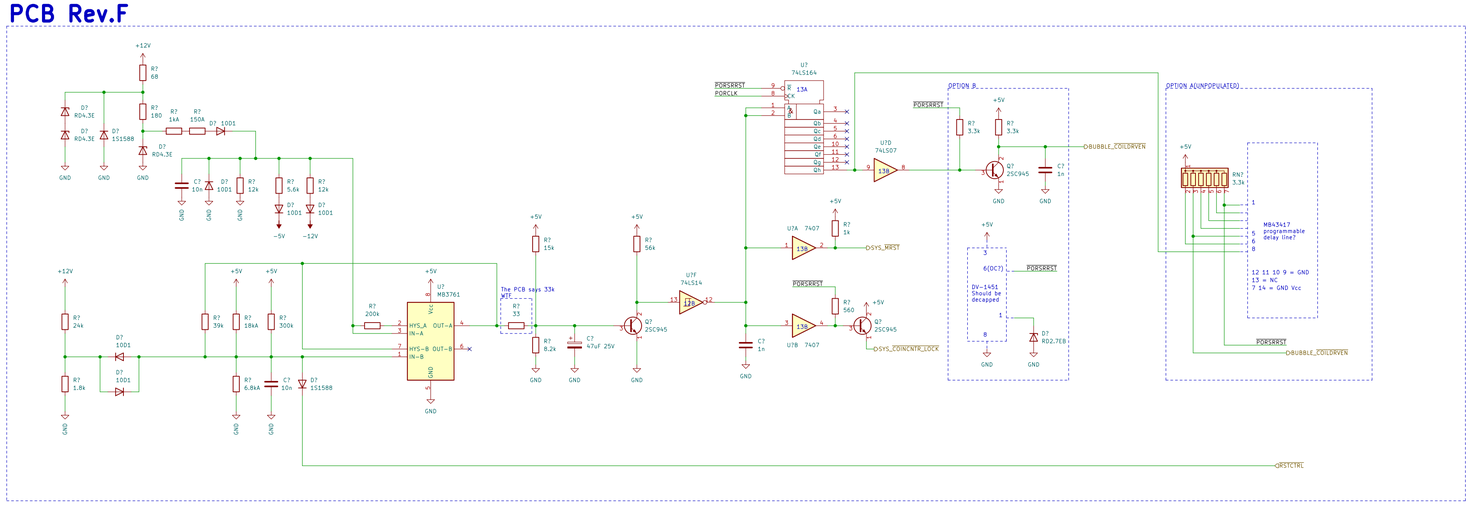

IKA Victor Co., Inc.	
Sheet: /BubbleSystem_Supervisor/	
File: BubbleSystem_Supervisor.kicad_sch	
Title: Konami Bubble System	
Size: A1 Date: 2023-08-27	**Rev: v1.1**
KiCad E.D.A. eeschema (6.0.0)	Id: 2/5

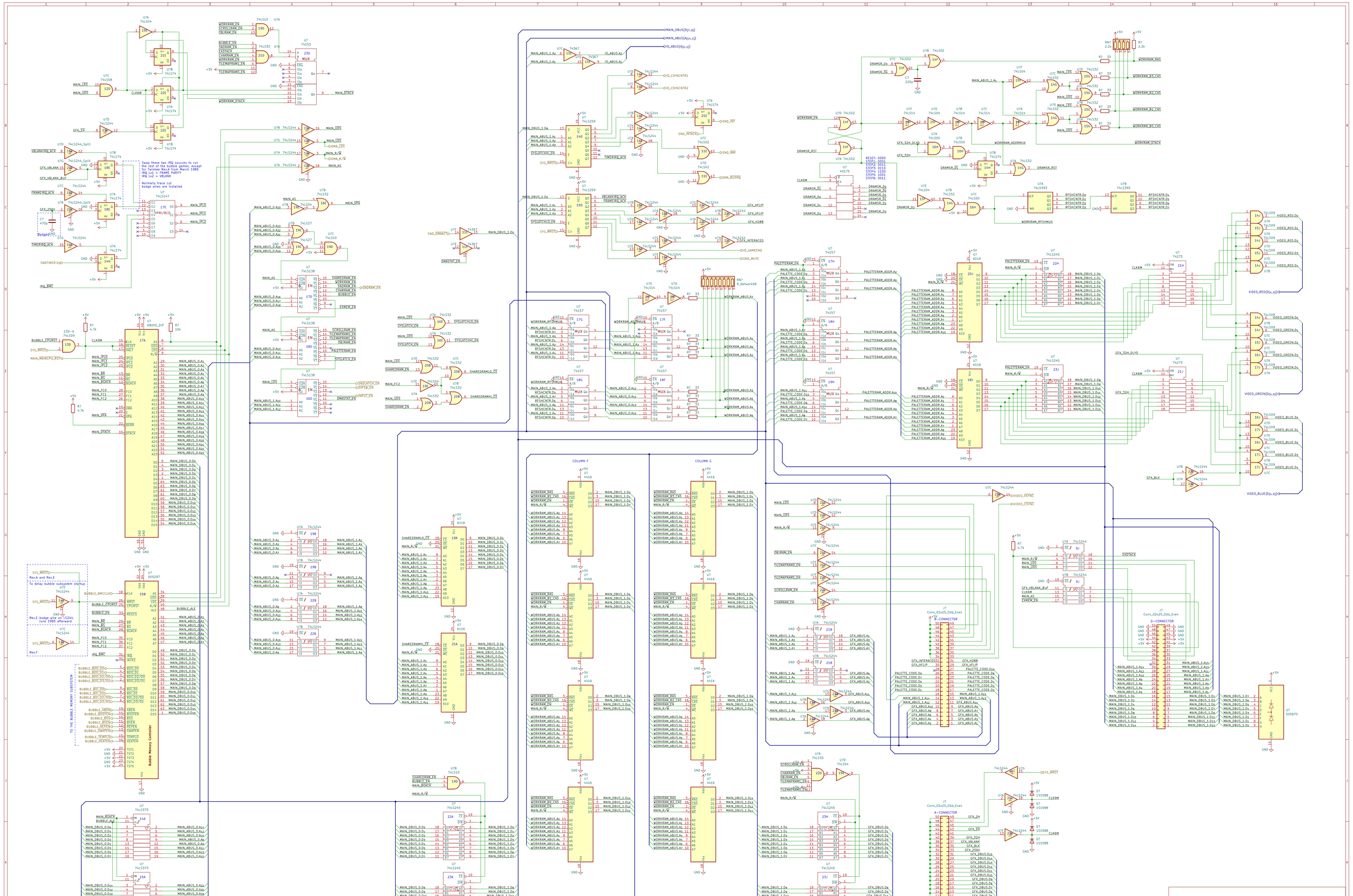
Swap these two IRQ sources to run the rest of the bubble games, except for the Japanese Pac-Man March 1985
IRQ 1=VBLANK / FRAME PARITY
IRQ 1v2 = VBLANK
Normally trace cut
bodge wires are installed
Bodge
Rev.E bodge wire on LS244, June 1985 afterward
To delay bubble subsystem startup
Rev.A and Rev.E
Rev.F
TO THE BUBBLE MEMORY SUBSYSTEM
Bubble Memory Controller
COLUMN F
COLUMN G
B-CONNECTOR
A-CONNECTOR
D-CONNECTOR
IKA Victor Co., Inc.
Sheet: /BubbleSystem_Main/
File: BubbleSystem_Main.kicad_sch
Title: Konami Bubble System
Size: A1
Date: 2023-08-27
Rev: v1.1
KiCad E.D.A. eeschema (6.0.0)
Id: 3/5

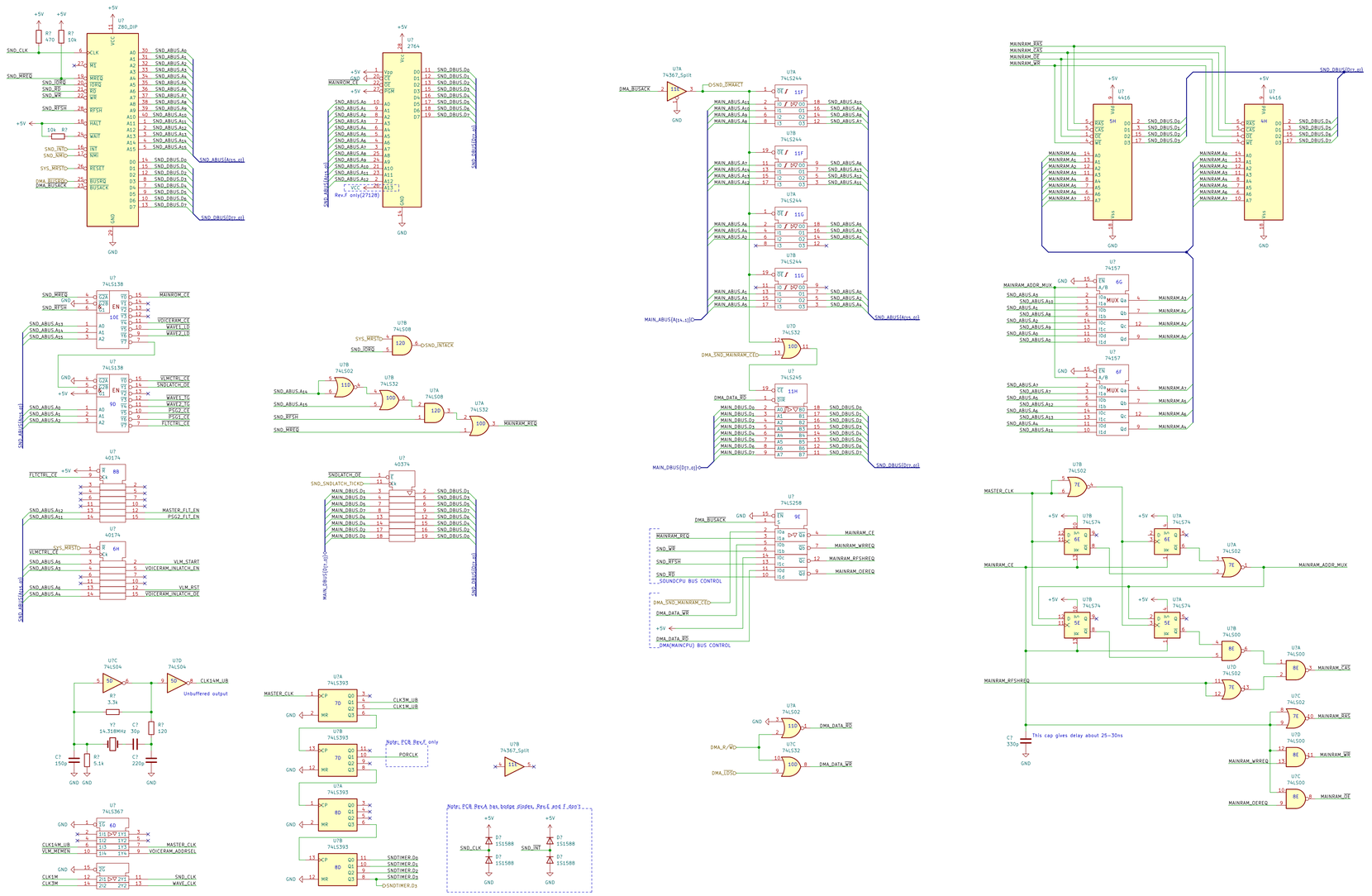

IKA Victor Co., Inc.	
Sheet: /BubbleSystem_Sound/	
File: BubbleSystem_Sound.kicad_sch	
Title: Konami Bubble System	
Size: A1 Date: 2023-08-27	Rev: v1.1
KiCad E.D.A. eeschema (6.0.0)	Id: 4/5

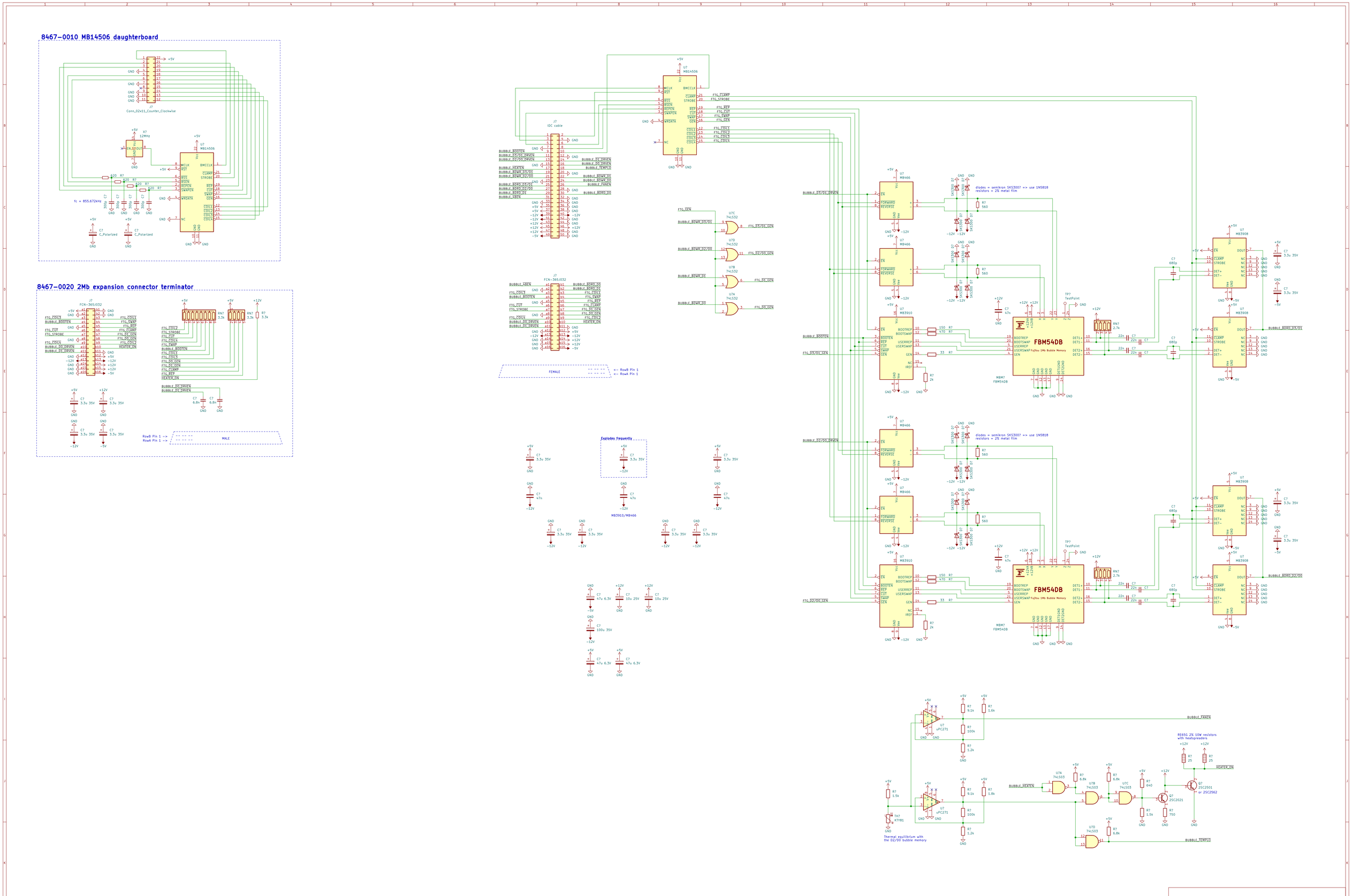

IKA Victor Co., Inc.
Sheet: /BubbleSystem_Bubble/
File: BubbleSystem_Bubble.kicad_sch

Title: Konami Bubble System

Size: A1	Date: 2023-08-27	Rev: v1.1
KiCad E.D.A. eeschema (6.0.0)		Id: 5/5