SHARE

SIGN UP

main.py diagram.json

```python
import machine
import utime

led_pins = [0,1,2,3,16,17,18,19]

leds = [machine.Pin(pin, machine.Pin.OUT) for pin in led_pins]

for decimal in range(255):
    binary = bin(decimal)[2:]
    binary = '0'*(8-len(binary)) + binary
    print(binary)
    for i, pin in enumerate(leds):
        pin.value(int(binary[i]))
    utime.sleep(1)
```
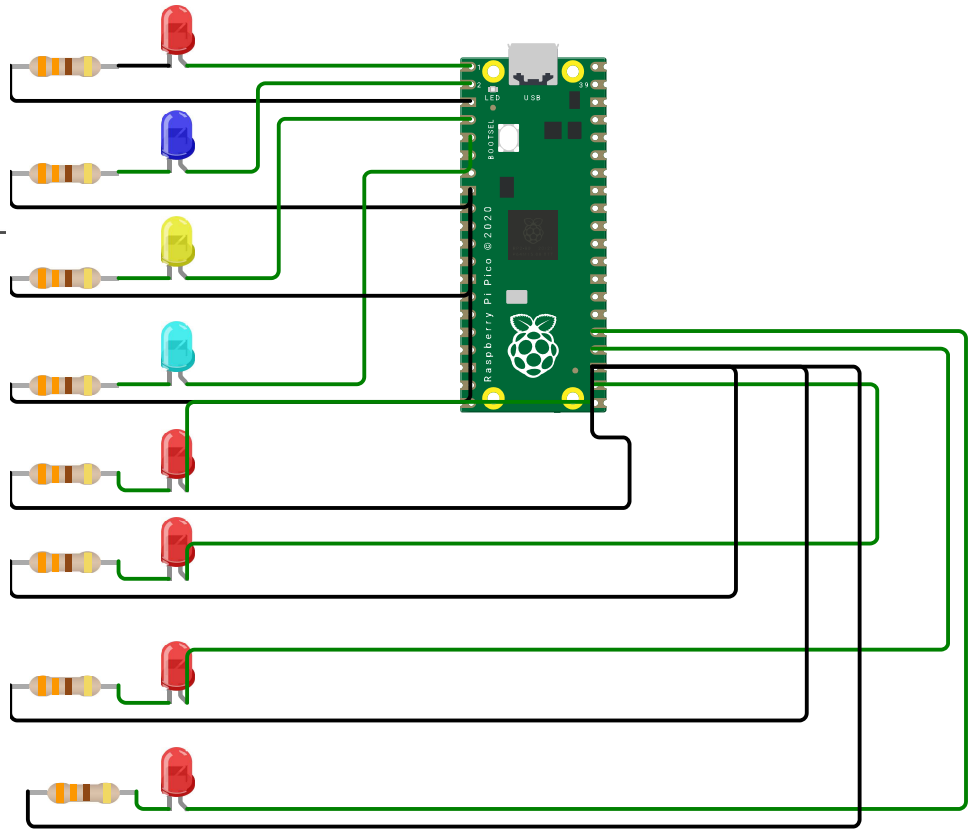
Simulation