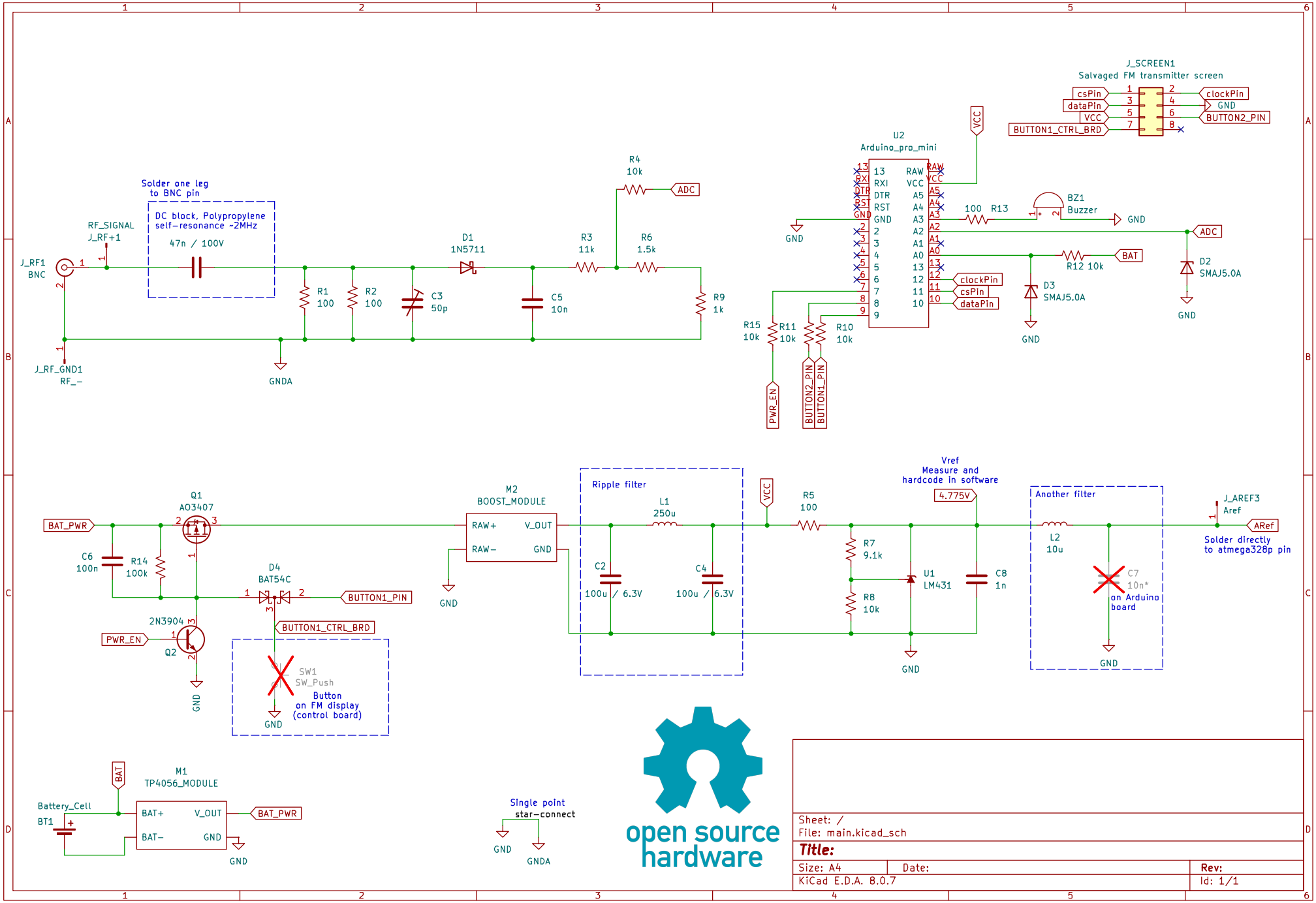
J_SCREEN1
Salvaged FM transmitter screen
csPin
dataPin
VCC
BUTTON1_CTRL_BRD
clockPin
GND
BUTTON2_PIN
U2
Arduino_pro_mini
VCC
RAW
RXI
DTR
RST
GND
A5
A4
A3
A2
A1
A0
clockPin
csPin
dataPin
100 R13
BZ1
Buzzer
GND
ADC
R12 10k
BAT
D2
SMAJ5.0A
D3
SMAJ5.0A
R15
10k
R11
10k
R10
10k
PWR_EN
BUTTON2_PIN
BUTTON1_PIN
Solder one leg
to BNC pin
DC block, Polypropylene
self-resonance ~2MHz
47n / 100V
RF_SIGNAL
J_RF+1
J_RF1
BNC
J_RF_GND1
RF_-
GNDA
R1
100
R2
100
C3
50p
D1
1N5711
C5
10n
R3
11k
R4
10k
R6
1.5k
R9
1k
Q1
AO3407
BAT_PWR
C6
100n
R14
100k
D4
BAT54C
BUTTON1_PIN
BUTTON1_CTRL_BRD
2N3904
Q2
PWR_EN
SW1
SW_Push
Button
on FM display
(control board)
M2
BOOST_MODULE
RAW+
V_OUT
RAW-
GND
Ripple filter
L1
250u
C2
100u / 6.3V
C4
100u / 6.3V
VCC
R5
100
Vref
Measure and
hardcode in software
4.775V
R7
9.1k
R8
10k
U1
LM431
C8
1n
Another filter
L2
10u
C7
10n*
on Arduino
board
J_AREF3
Aref
ARef
Solder directly
to atmega328p pin
M1
TP4056_MODULE
BAT
Battery_Cell
BT1
BAT+
V_OUT
BAT-
GND
BAT_PWR
Single point
star-connect
GND
GNDA
open source
hardware
Sheet: /
File: main.kicad_sch
Title:
Size: A4
Date:
Rev:
KiCad E.D.A. 8.0.7
Id: 1/1