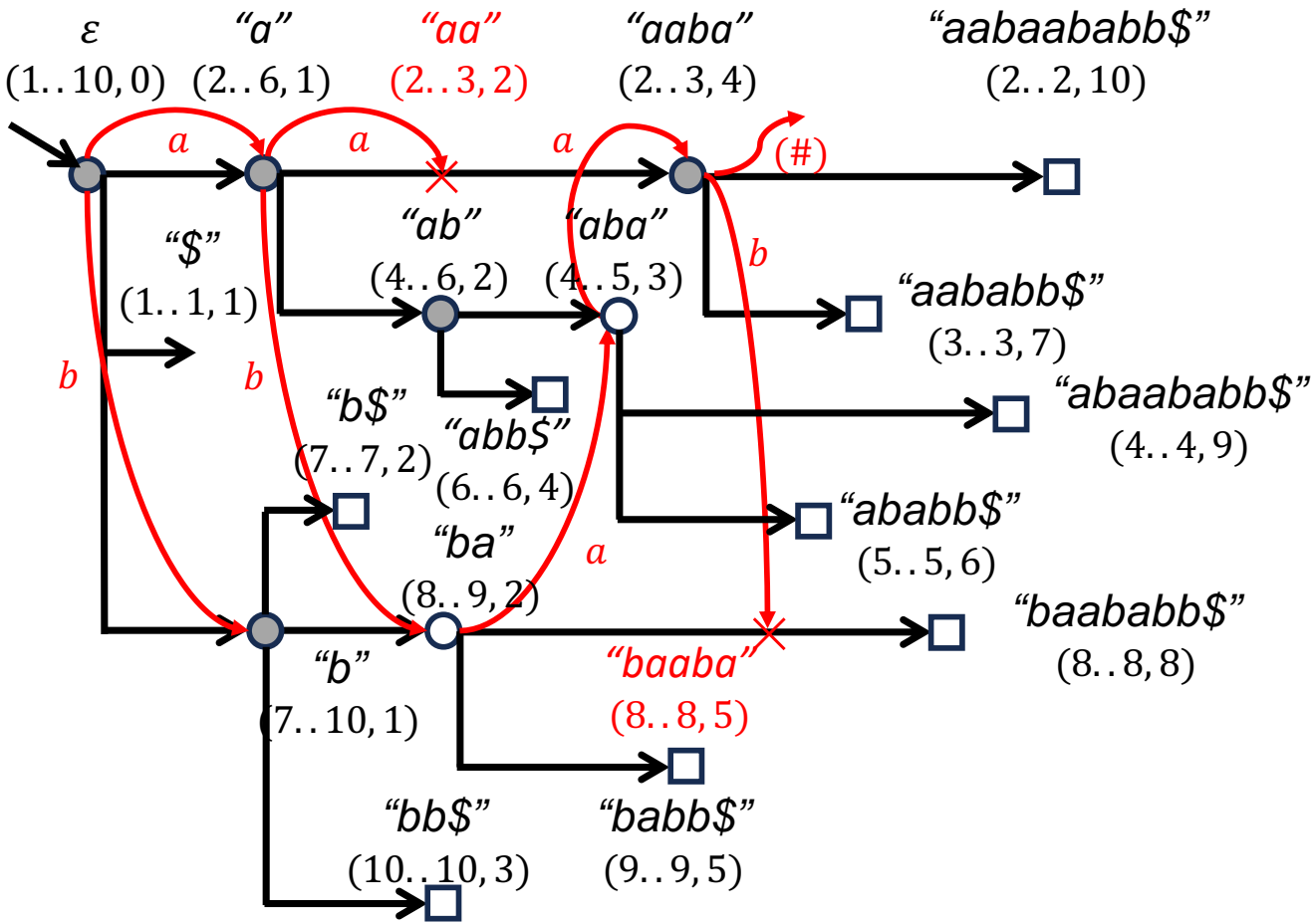

marker factor type
(object of the suffix tree)

- maximal repeat (branching node)
- non-maximal repeat (branching node)
- non-repeat (leaf)
- non-right-branching (virtual node)
- tree edge (goto link)
- Weiner edge (reverse suffix link)