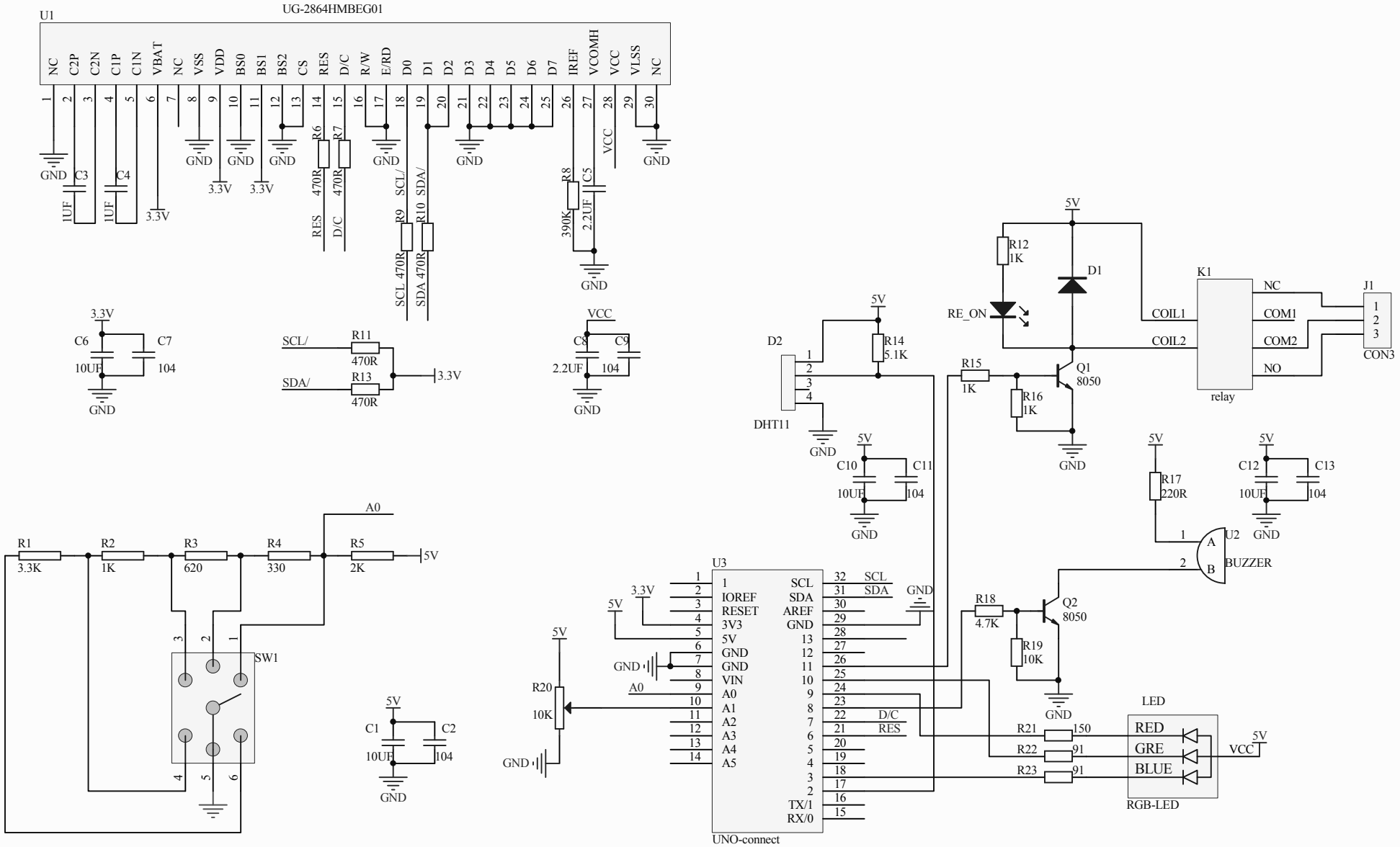
U1
UG-2864HMBEG01
NC C2P C2N C1P C1N VBAT NC VSS VDD BS0 BS1 BS2 CS RES D/C R/W E/RD D0 D1 D2 D3 D4 D5 D6 D7 IREF VCOMH VCC VLSS NC
C3 1UF
C4 1UF
R6 470R
R7 470R
R9 470R
R10 470R
R8 390K
C5 2.2UF
3.3V
GND
VCC
SCL/
SDA/
RES
D/C
C6 10UF
C7 104
R11 470R
R13 470R
C8 2.2UF
C9 104
R1 3.3K
R2 1K
R3 620
R4 330
R5 2K
A0
5V
SW1
C1 10UF
C2 104
R20 10K
U3
IOREF
RESET
3V3
5V
GND
GND
VIN
A0
A1
A2
A3
A4
A5
SCL
SDA
AREF
GND
13
12
11
10
9
8
7
6
5
4
3
2
TX/1
RX/0
D/C
RES
UNO-connect
D2
DHT11
R14 5.1K
C10 10UF
C11 104
R12 1K
RE_ON
D1
R15 1K
R16 1K
Q1 8050
K1
relay
COIL1
COIL2
NC
COM1
COM2
NO
J1
CON3
R17 220R
C12 10UF
C13 104
U2
BUZZER
R18 4.7K
R19 10K
Q2 8050
LED
RED
GRE
BLUE
R21 150
R22 91
R23 91
RGB-LED