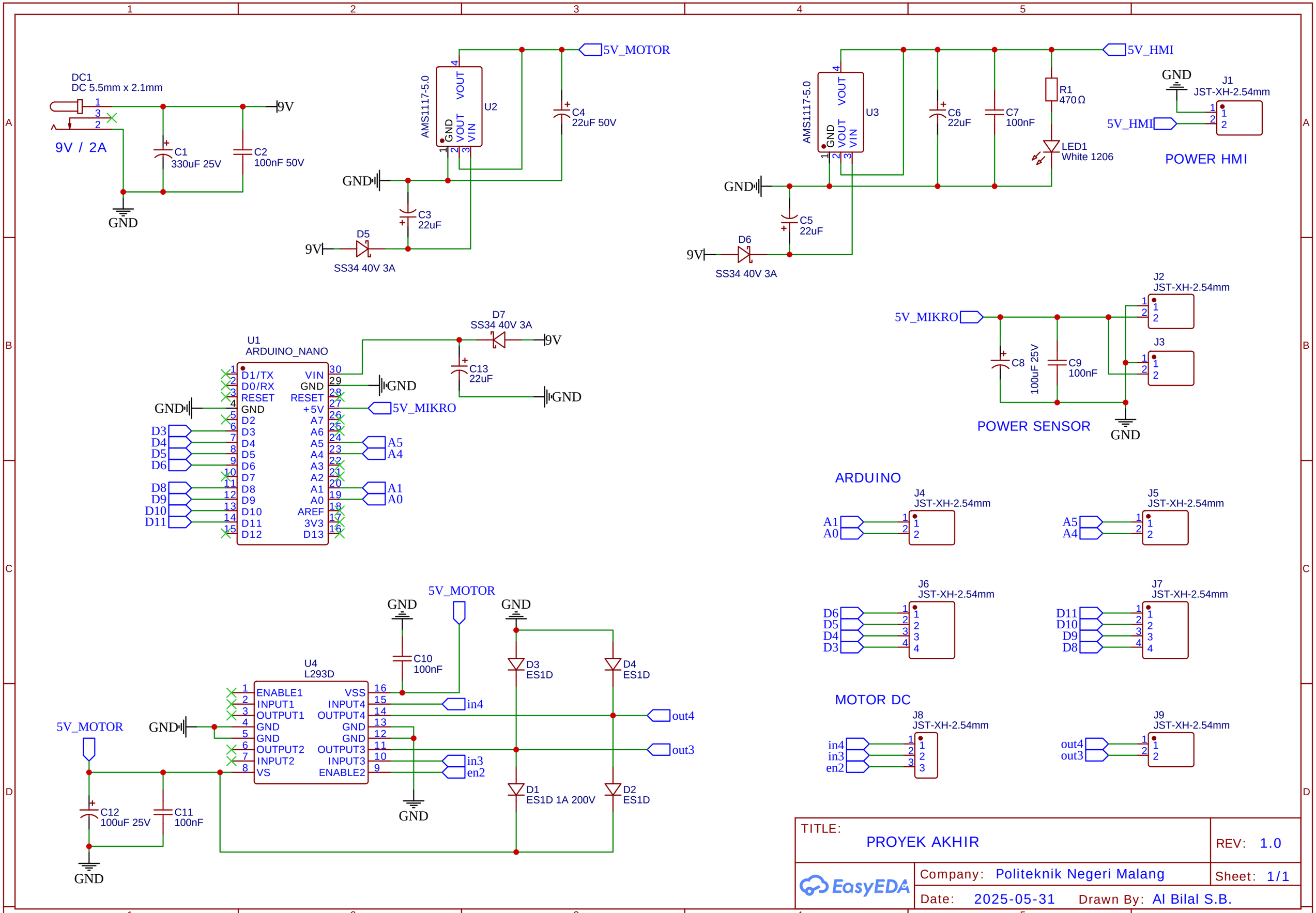
DC1
DC 5.5mm x 2.1mm
9V / 2A
C1
330uF 25V
C2
100nF 50V
9V
GND
AMS1117-5.0
U2
VOUT
GND
VOUT
VIN
C3
22uF
C4
22uF 50V
5V_MOTOR
D5
SS34 40V 3A
U3
C5
22uF
C6
22uF
C7
100nF
R1
470Ω
LED1
White 1206
5V_HMI
J1
JST-XH-2.54mm
POWER HMI
D6
SS34 40V 3A
U1
ARDUINO_NANO
D1/TX
D0/RX
RESET
GND
D2
D3
D4
D5
D6
D7
D8
D9
D10
D11
D12
VIN
GND
RESET
+5V
A7
A6
A5
A4
A3
A2
A1
A0
AREF
3V3
D13
D7
SS34 40V 3A
C13
22uF
5V_MIKRO
A5
A4
A1
A0
J2
JST-XH-2.54mm
J3
C8
100uF 25V
C9
100nF
POWER SENSOR
ARDUINO
J4
JST-XH-2.54mm
J5
JST-XH-2.54mm
J6
JST-XH-2.54mm
J7
JST-XH-2.54mm
MOTOR DC
J8
JST-XH-2.54mm
J9
JST-XH-2.54mm
U4
L293D
ENABLE1
INPUT1
OUTPUT1
GND
GND
OUTPUT2
INPUT2
VS
VSS
INPUT4
OUTPUT4
GND
GND
OUTPUT3
INPUT3
ENABLE2
C10
100nF
in4
in3
en2
out4
out3
D3
ES1D
D4
ES1D
D1
ES1D 1A 200V
D2
ES1D
C12
100uF 25V
C11
100nF
TITLE:
PROYEK AKHIR
REV: 1.0
Company: Politeknik Negeri Malang
Sheet: 1/1
Date: 2025-05-31
Drawn By: Al Bilal S.B.
EasyEDA