# 1 Organization and Introduction

- The Art of managing complexity
  - Abstraction: Hiding details when they are not important
  - Discipline: Intentionally restricting your design choices so that you can work more productively at higher abstraction levels
  - The three -Y's
    - Hierarchy: A system is divided into modules of smaller complexity
    - Modularity: Having well defined functions and interfaces
    - Regularity: Encouraging uniformity, so modules can be easily re-used
- Bit: **B**inary dig**it**

# 2 Binary Numbers

- Powers of two:

| | | |
|---|---|---|
| $2^0 = 1$ | $2^5 = 32$ | $2^{10} = 1024$ |
| $2^1 = 2$ | $2^6 = 64$ | $2^{11} = 2048$ |
| $2^2 = 4$ | $2^7 = 128$ | $2^{12} = 4096$ |
| $2^3 = 8$ | $2^8 = 256$ | $2^{13} = 8192$ |
| $2^4 = 16$ | $2^9 = 512$ | $2^{14} = 16384$ |

- Binary to decimal conversion

$$\begin{aligned} 10011_2 &= 2^4 \times 1 + 2^3 \times 0 + 2^2 \times 0 + 2^1 \times 1 + 2^0 \times 1 \\ &= 16 \times 1 + 8 \times 0 + 4 \times 0 + 2 \times 1 + 1 \times 1 \\ &= 16 + 0 + 0 + 2 + 1 = 19_{10} \end{aligned}$$

- Convert decimal to binary (roughly). Example with $47_{10}$ to binary

| | | | | |
|---|---|---|---|---|
| $2^6 = 64$ | is $64 \leq 47$? | no | 0 | do nothing |
| $2^5 = 32$ | is $32 \leq 47$? | yes | 1 | 47-32=15 |
| $2^4 = 16$ | is $16 \leq 15$? | no | 0 | do nothing |
| $2^3 = 8$ | is $8 \leq 15$? | yes | 1 | 15-8=7 |
| $2^2 = 4$ | is $4 \leq 7$? | yes | 1 | 7-4=3 |
| $2^1 = 2$ | is $2 \leq 3$? | yes | 1 | 3-2=1 |
| $2^0 = 1$ | is $1 \leq 1$? | yes | 1 | 1-1=0; done! |

$\Rightarrow 47_{10}$ to binary is $0101111_2$

- Binary values and range
  - $N-$digit decimal number
    - How many values: $10^N$
    - Range: $[0, 10^N - 1]$
    - Example (3-digit number): $10^3 = 1000$ possible values, range:$[0, 999]$
  - $N-$bit binary number
    - How many values: $2^N$

    - Range: $[0, 2^N - 1]$
    - Example (3-digit number): $2^3 = 8$ possible values, range:$[0, 7] = [000_2 \text{ to } 111_2]$

- Hexadecimal (Base-16) Numbers

| Decimal | Hexadecimal | Binary | | Decimal | Hexadecimal | Binary |
|---|---|---|---|---|---|---|
| 0 | 0 | 0000 | | 8 | 8 | 1000 |
| 1 | 1 | 0001 | | 9 | 9 | 1001 |
| 2 | 2 | 0010 | | 10 | A | 1010 |
| 3 | 3 | 0011 | | 11 | B | 1011 |
| 4 | 4 | 0100 | | 12 | C | 1100 |
| 5 | 5 | 0101 | | 13 | D | 1101 |
| 6 | 6 | 0110 | | 14 | E | 1110 |
| 7 | 7 | 0111 | | 15 | F | 1111 |

- Bits, Bytes, Nibbles...

$$\underbrace{1}_{\text{MSB}}\,001011\,\underbrace{0}_{\text{LSB}}\quad \overbrace{1001\,\underbrace{0110}_{\text{nibble}}}^{\text{Byte}}\quad \underbrace{\text{CE}}_{\text{MSB}}\,\text{BF9A}\,\underbrace{\text{D7}}_{\text{LSB}}$$

  Where MSB=Most significant Bit and LSB=Least significant Bit

- Addition in base two works exactly the same as in base 10, using carries

- Overflow
  - Digital systems operate on a fixed number of bits
  - Addition overflows when the result is too big to fit in the available number of bits

- Signed Binary Numbers
  - Sign/Magnitude Numbers
    - 1 sign bit, $N - 1$ magnitude bits
    - Sign bit is the most significant (left-most) bit
    - Example: 4-bit sign/mag repr. of $\pm 6$:
      - $+6 = \mathbf{0}110$
      - $-6 = \mathbf{1}110$
    - Range of an $N-$bit sign/magnitude number: $\left[-\left(2^{N-1} - 1\right), 2^{N-1} - 1\right]$
    - Problems:
      - Addition doesn't work
      - Two representations of 0 ($\pm 0$): 1000 and 0000
      - Introduces complexity in the processor design
  - One's Complement Numbers

* A negative number is formed by reversing the bits of the positive number (MSB still indicates the sign of the integer)

| $2^7$ | $2^6$ | $2^5$ | $2^4$ | $2^3$ | $2^2$ | $2^1$ | $2^0$ | | One's Compl. | Unsigned |
|---|---|---|---|---|---|---|---|---|---|---|
| 0 | 0 | 0 | 0 | 0 | 0 | 0 | 0 | = | 0 | 0 |
| 0 | 0 | 0 | 0 | 0 | 0 | 0 | 1 | = | 1 | 1 |
| 0 | 0 | 0 | 0 | 0 | 0 | 1 | 0 | = | 2 | 2 |
| ... | ... | ... | ... | ... | ... | ... | ... | ... | ... | ... |
| 0 | 1 | 1 | 1 | 1 | 1 | 1 | 1 | = | 127 | 127 |
| 1 | 0 | 0 | 0 | 0 | 0 | 0 | 0 | = | -127 | 128 |
| 1 | 0 | 0 | 0 | 0 | 0 | 0 | 1 | = | -126 | 129 |
| ... | ... | ... | ... | ... | ... | ... | ... | ... | ... | ... |
| 1 | 1 | 1 | 1 | 1 | 1 | 0 | 1 | = | -2 | 253 |
| 1 | 1 | 1 | 1 | 1 | 1 | 1 | 0 | = | -1 | 254 |
| 1 | 1 | 1 | 1 | 1 | 1 | 1 | 1 | = | -0 | 255 |

* Range of $n-$bit number: $[-2^{n-1}-1, 2^{n-1}-1]$, 8 bits:$[-127, 127]$
* Addition: Done using binary addition with end-around carry. If there is a carry out of the MSB of the sum, this bit must be added to the LSB of the sum

– Two's Complement Numbers

* Don't have same problems as sign/magnitude numbers:
  · addition works
  · Single representation for 0
* Has advantages over one's complement:
  · Has a single 0 representation
  · Eliminates the end-around carry operation required in one's complement addition.
* A negative number is formed by reversing the bits of the positive number (MSB still indicates the sign of the integer) and adding 1:

| $2^7$ | $2^6$ | $2^5$ | $2^4$ | $2^3$ | $2^2$ | $2^1$ | $2^0$ | | Two's Compl. | Unsigned |
|---|---|---|---|---|---|---|---|---|---|---|
| 0 | 0 | 0 | 0 | 0 | 0 | 0 | 0 | = | 0 | 0 |
| 0 | 0 | 0 | 0 | 0 | 0 | 0 | 1 | = | 1 | 1 |
| 0 | 0 | 0 | 0 | 0 | 0 | 1 | 0 | = | 2 | 2 |
| ... | ... | ... | ... | ... | ... | ... | ... | ... | ... | ... |
| 0 | 1 | 1 | 1 | 1 | 1 | 1 | 1 | = | 127 | 127 |
| 1 | 0 | 0 | 0 | 0 | 0 | 0 | 0 | = | -128 | 128 |
| 1 | 0 | 0 | 0 | 0 | 0 | 0 | 1 | = | -127 | 129 |
| ... | ... | ... | ... | ... | ... | ... | ... | ... | ... | ... |
| 1 | 1 | 1 | 1 | 1 | 1 | 0 | 1 | = | -3 | 253 |
| 1 | 1 | 1 | 1 | 1 | 1 | 1 | 0 | = | -2 | 254 |
| 1 | 1 | 1 | 1 | 1 | 1 | 1 | 1 | = | -1 | 255 |

* Same as unsigned binary, but the most significant bit (MSB) has value of $-2^{N-1}$
  · Most positive 4-bit number: 0111
  · Most negative 4-bit number: 1000
* The most significant bit still indicates the sign (1=neg., 0=pos.)
* Range of an $N-$bit two's comp. number: $[-2^{N-1}, 2^{N-1}-1]$, 8 bits:$[-128, 127]$

- Increasing bit width (assume from $N$ to $M$, with $M > N$):
  - Sign-extension
    - Sign bit is copied into MSB
    - Number value remains the same
    - Give correct result for two's compl. numbers
    - Example 1:
      - 4-bit representation of $3 = \mathbf{0}011$
      - 8-bit sign-extended value: $\mathbf{00000}011$
    - Example 2:
      - 4-bit representation of $-5 = \mathbf{1}011$
      - 8-bit sign-extended value: $\mathbf{11111}011$
  - Zero-extension
    - Zeros are copied into MSB
    - Value will change for negative numbers
    - Example 1:
      - 4-bit value: $0011_2 = 3_{10}$
      - 8-bit zero-extended value: $\mathbf{0000}0011_2 = 3_{10}$
    - Example 2:
      - 4-bit value: $1011_2 = -5_{10}$
      - 8-bit zero-extended value: $\mathbf{0000}1011_2 = 11_{\mathbf{10}}$

# 3 Short Introduction to Electrical Engineering (EE Perspective)

- The goal of circuit design is to optimize:
  - Area: Net circuit area is proportional to the cost of the device
  - Speed/Throughput: We want circuits that work faster, or do more
  - Power/Energy
    - Mobile devices need to work with a limited power supply
    - High performance devices dissipate more than $100\text{W}/cm^2$
  - Design time
    - Designers are expensive
    - The competition will not wait for you
- (Frank's) Principles for engineering
  - Good engineers are lazy: They do not want to work unnecessarily, be creative
  - They know how to ask the question "why"?: take nothing for granted
  - Engineering is not a religion: Use what works best for you
  - Keep it simple and stupid: Engineers' job is to manage complexity

- Building blocks for microchips
  - Conductors: Metals (Aluminium, Copper)
  - Insulators: Glass ($SiO_2$), Air
  - Semiconductors: Silicon (Si), Germanium (Ge)
- N-type Doping: Add extra electron (negatively charged), zone becomes negatively charged

Maybe add a definition or a better explanation

- P-type Doping: Remove electron, zone becomes positively charged
- Semiconductors:
  - You can "Engineer" its properties, i.e.
    * Make it P type by injecting type-III elements (b, Ga, In)
    * Make it N type by injecting elements from type-V (P, As)
  - You can combine P and N regions to each other, from a pure semiconductor
  - Allows you to make interesting electrical devices (Diodes, Transistors, Thrystors)
- pMOS is a P type transistor, nMOS an N type transistors; combined they are a CMOS
- CMOS (Properties)
  - No input current: Capacitive input, no resistive path from the input
  - No current when output is at logic levels: Little static power, current is needed only when switching
  - Electrical properties determined directly by geometry: A transistor that is 2 times larger drives twice the current
  - Very simple to manufacture: pMOS and nMOS can be manufactures on the same substrate
- CMOS Gate Structure
  - The general form used to construct any inverting logic, such as: NOT, NAND, NOR
    * The networks may consist of transistors in series or parallel
    * When transistors are in parallel, the network is ON if either transistor is ON
    * When transistors are in series, the network is ON only if all transistors are ON
  - In a proper logic gate: One of the networks should be ON and the other OFF at any given time
  - Use the rule of conduction complements:
    * When nMOS transistors are in series, the pMOS transistor must be in parallel

    * When nMOS transistors are in parallel, the pMOS transistors must be in series

Add picture on slide 34, 03 - EEPerspective

- Logic Gates
  - Perform logic functions: Inversion (NOT), AND, OR, NAND, NOR, etc.
  - Single input: NOT gate, buffer
  - Two-input: AND, OR, XOR, NAND, NOR, XNOR

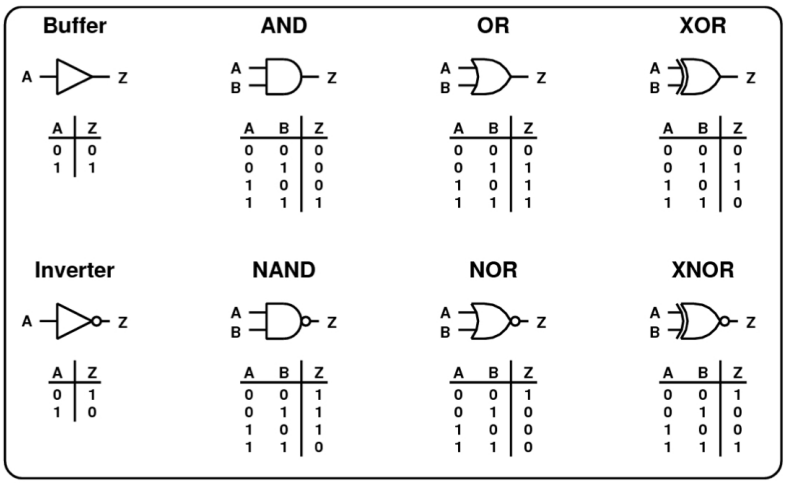


  - Multiple-Input:
    * 3, 4, or even more input AND, OR, XOR gates
    * Compound gates
      · AND-OR
      · OR-AND
      · AND-OR-INVERT
      · OR-AND-INVERT
    * Other cells: Multiplexers and Adders

- Logic Levels
  - Define ranges of discrete voltages to represent 1 and 0 (i.e. 0 for ground and 1 for 5V ($V_{DD}$)) and allow for noise.

- Noise: Is anything that degrades the signal (i.e. resistance, power supply noise, etc.)

- Moore's Law
  - *"Number of transistors that can be manufactured doubles roughly every 18 months."* - Gordon Moore, 1965

- How do we keep Moore's Law:

- Manufacturing smaller structures: some structures are already a few atoms in size
- Developing materials with better properties
- Optimizing the manufacturing steps
- New technologies

- Power consumption
  - Power = Energy consumed per unit time
  - Two types of power consumption:
    1. Dynamic power consumption: Power to charge transistor gate capacitances
    $$P_{\text{dynamic}} = \frac{1}{2}CV_{DD}^2 f$$
    2. Static power consumption: Power consumed when no gates are switching, caused by the leakage current
    $$P_{\text{static}} = I_{DD}V_{DD}$$

- Power Consumption example:
  - Estimate the power consumption of a wireless handheld computer
    * $V_{DD} = 1.2V$
    * $C = 20nF$
    * $f = 1GHz$
    * $I_{DD} = 20mA$

$$\begin{aligned} P_{\text{total}} &= P_{\text{dynamic}} + P_{\text{static}} \\ &= \frac{1}{2}CV_{DD}^2 f + I_{DD}V_{DD} \\ &= \frac{1}{2}(20nF)(1.2V)^2(1GHz) + (20mA)(1.2V) \\ &= 14.4W \end{aligned}$$

# 4 Combinational Circuits: Theory

- Circuit elements. A circuit consists of:
  - Inputs
  - Outputs
  - Nodes (wires): Connections between I/O and circuit elements. To count them, look at
    * Outputs of every circuit elements
    * Inputs to the entire circuit
  - Circuit elements

- Types of Logic Circuits

- Combinational Logic
  - Memoryless
  - Outputs determined by current values of inputs
  - In some books called Combinatorial Logic
- Sequential Logic
  - Has Memory
  - Outputs determined by previous and current values of inputs

- Rules of Combinational Composition
  - Every circuit element is itself combinational
  - Every node of the circuit is either
    - Designated as an input to the circuit
    - Connects to exactly one output terminal of a circuit element
  - The circuit contains no cyclic paths: Every path through the circuit visits each node at most once

- Boolean Equations[1]
  - Functional specifications of outputs in terms of inputs.

- Boolean Algebra
  - Set of axioms and theorems to simplify Boolean equations
  - Like regular algebra, but in some cases simpler because variables only have 1 or 0 as a value
  - Axioms and theorems obey the principles of duality:
    - Stay corrected if: ANDs and ORs interchanged and 0's and 1's interchanged
    - Example:

| | Dual |
|---|---|
| $\overline{0} = 1$ | $\overline{1} = 0$ |
| $B \cdot \overline{B} = 0$ | $B + \overline{B} = 1$ |

- Boolean Axioms

| | Axiom | | Dual | Name |
|---|---|---|---|---|
| $A1$ | $B = 0$ if $B \neq 1$ | $A1'$ | $B = 1$ if $B \neq 0$ | Binary Field |
| $A2$ | $\overline{0} = 1$ | $A2'$ | $\overline{1} = 0$ | NOT |
| $A3$ | $0 \cdot 0 = 0$ | $A3'$ | $1 + 1 = 1$ | AND/OR |
| $A4$ | $1 \cdot 1 = 1$ | $A4'$ | $0 + 0 = 0$ | AND/OR |
| $A5$ | $0 \cdot 1 = 1 \cdot 0 = 0$ | $A5'$ | $1 + 0 = 0 + 1 = 1$ | AND/OR |

Duality: If the symbols 0 and 1 and the operators $\cdot$ (AND) and $+$ (OR) are interchanged, the statement will still be correct

[1] For a more in depth look, use the material from Diskrete Mathematik

- Boolean Theorems

| | Theorem | | Dual | Name |
|---|---|---|---|---|
| $T1$ | $B \cdot 1 = B$ | $T1'$ | $B + 0 = B$ | Identity |
| $T2$ | $B \cdot 0 = 0$ | $T2'$ | $1 = 0$ | Null Element |
| $T3$ | $B \cdot B = B$ | $T3'$ | $1 + 1 = 1$ | Idempotency |
| $T4$ | | $\overline{\overline{B}} = B$ | | Involution |
| $T5$ | $B \cdot \overline{B} = 0$ | $T5'$ | $1 + 0 = 0 + 1 = 1$ | Complements |
| $T6$ | $B \cdot C = C \cdot B$ | $T6'$ | $B + C = C + B$ | Commutativity |
| $T7$ | $(B \cdot C) \cdot D = B \cdot (C \cdot D)$ | $T7'$ | $(B + C) + D = B + (C + D)$ | Associtivity |
| $T8$ | $(B \cdot C) + (B \cdot D) = B \cdot (C + D)$ | $T8'$ | $(B + C) \cdot (B + D) = B + (C \cdot D)$ | Distributivity |
| $T9$ | $B \cdot (B + C) = B$ | $T9'$ | $B + (B \cdot C) = B$ | Covering |
| $T10$ | $(B \cdot C) + (B \cdot \overline{C}) = B$ | $T10'$ | $(B + C) \cdot (B + \overline{C}) = B$ | Combining |
| $T11$ | $(B \cdot C) + (\overline{B} \cdot D) + (C \cdot D)$ $= B \cdot C + \overline{B} \cdot D$ | $T11'$ | $(B + tC) \cdot (\overline{B} + D) \cdot (C + D)$ $= (B + C) \cdot (\overline{B} + D)$ | Consensus |
| $T12$ | $\overline{B_0 \cdot B_1 \cdot B_2 \cdot \ldots} = (\overline{B_0} + \overline{B_1} + \overline{B_2} + \ldots)$ | $T12'$ | $\overline{B_0 + B_1 + B_2 + \ldots} = (\overline{B_0} \cdot \overline{B_1} \cdot \overline{B_2} \cdot \ldots)$ | De Morgan's Theorem |

- Bubble Pushing
  - Pushing bubbles backward (from the output) or forward (from the inputs) changes the body of the gate from AND to OR or vice versa
    - Pushing a bubble from the output back to the inputs puts bubbles on all gate inputs
    - Pushing bubbles on all gate inputs forward toward the output puts a bubble on the output and changes the gate body

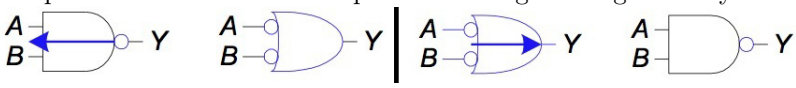


  - Rules:
    - Begin at the output of the circuit and work toward the inputs
    - Push any bubbles on the final output back toward the inputs
    - Draw each gate in a form so that bubbles cancel

# 5 Combinational Circuits Design

- Some Definitions:
  - Complement: variable with a bar over it $(\overline{A}, \overline{B}, \overline{C})$
  - Literal: variable or its complement $(A, \overline{A}, B, \overline{B}, C, \overline{C})$
  - Implicant: product (AND) of literals $(A \cdot B \cdot \overline{C})$
  - Minterm: product (AND) that includes all input variables $(A \cdot B \cdot \overline{C})$
  - Maxterm: sum (OR) that includes all input variables $(A + \overline{B} + \overline{C})$
- Sum-of-Products (SOP) Form

aggiungere tabella cerchiata ai valori Y=1

| A | B | Y | minterm |
|---|---|---|---|
| 0 | 0 | 0 | $\overline{A}\overline{B}$ |
| 0 | 1 | 1 | $\overline{A}B$ |
| 1 | 0 | 0 | $A\overline{B}$ |
| 1 | 1 | 1 | $AB$ |

$$Y = F(A, B) = (\overline{A} \cdot B) + (A \cdot B)$$

- All boolean equations can be written in SOP form
  - Each row in a truth table has a minterm
  - A minterm is a product (AND) of literals
  - Each minterm is TRUE for that row (and only that row)
- Formed by ORing the minterms for which the output is TRUE

- The Dual: Product-of-Sums (POS) Form

aggiungere tabella cechiata ai valori Y=0

| A | B | Y | maxterm |
|---|---|---|---|
| 0 | 0 | 0 | $A + B$ |
| 0 | 1 | 1 | $A + \overline{B}$ |
| 1 | 0 | 0 | $\overline{A} + B$ |
| 1 | 1 | 1 | $\overline{A} + \overline{B}$ |

$$Y = F(A, B) = (A + B) \cdot (\overline{A} + B)$$

- All Boolean equations can be written in POS form
  - Each row in a truth table has a maxterm
  - A minterm is a sum (OR) of literals
  - Each minterm is FALSE for that row (and only that row)
- Formed by ANDing the maxterms for which the output is FALSE

- Karnaugh Maps (K-Maps)
  - Boolean expressions can be minimized by combining terms
  - K-maps minimize equations graphically
  - Rules:
    - Special order for bit combinations: $\overleftarrow{00, 01, 11, 10}$ (only one bit changes to the next)
    - Every 1 in a K-map must be circled at least once
    - Each circle must span a power of 2 ($2^0$ included) squares in each direction
    - Each circle must be as large as possible
    - A circle may wrap around the edges of the K-map
    - A "Don't care" ($X$) is circled only if it helps minimize the equation

- Circuit schematics
  - Inputs: left (or top) side of a schematic
  - Outputs: right (or bottom) side of a schematic
  - Circuits should flow from left to right
  - Straight wires are better than wires with multiple corners
  - Wires always connect at a T junction

  - A dot where wires cross indicated a connection between the wires
  - Wires crossing without a dot make no connection

- Additional Logic Levels: $X$ and $Z$
  - Contention: $X$
    * When a signal is being driven to 1 and 0 simultaneously
    * Not a real level, could be any value (1,0 or something in between)
    * Usually a problem:
      · Two outputs drive one node to opposite values
      · Normally there should only be one driver for every connection
    * WARNING: "Don't care" and "contention" are both called $X$
      · These are not the same
      · Verilog uses $X$ for both, VHDL uses "-" for don't care, and "$X$" for contention
      · Don't care: degree of freedom that is fixed at implementation time
      · Contention: a bug really, undetermined behaviour
  - High-impedance or tri-state (or Floating): $Z$
    * When an output is not driving to any specific value
    * Means the output is disconnected
    * Not a real level, some other output is able to determine the level
    * Output is called Floating, high impedance, tri-stated, or high-$Z$
    * Floating output might be 0, 1 or somewhere in between
    * Floating nodes are used in tri-state busses:
      · Many different drivers share one common connection
      · Exactly one driver is active at any time
      · All the other drivers are "disconnected"
      · The disconnected drivers are said to be floating, allowing exactly one node to drive
      · More than one input can listen to the shared bus without problems

- Combinational Building Blocks
  - Combinational logic is often grouped into larger building blocks to build more complex systems
  - Hide the unnecessary gate-level details to emphasize the function of the building block (full adders, priority circuits, etc.)

- Multiplexer (Mux)
  - Selects between one of $N$ inputs to connect to the output
  - Needs $\log_2 N-$bit control input
  - A 4:1 Multiplexer can be implemented with:

    * Two-level logic
    * Tristate buffers
    * Tree of 2:1 muxes
  - In general, a $2^N-$input multiplexer can be programmed to perform any $N-$input logic function by applying 0's and 1's to the appropriate data inputs

- Decoders
  - $N$ inputs, $2^N$ outputs
  - One-hot outputs: only one output HIGH at once

- Timing
  - Propagation delay: $t_{pd}$ = max delay from input to output
  - Contamination delay: $t_{cd}$ = min delay from input to output

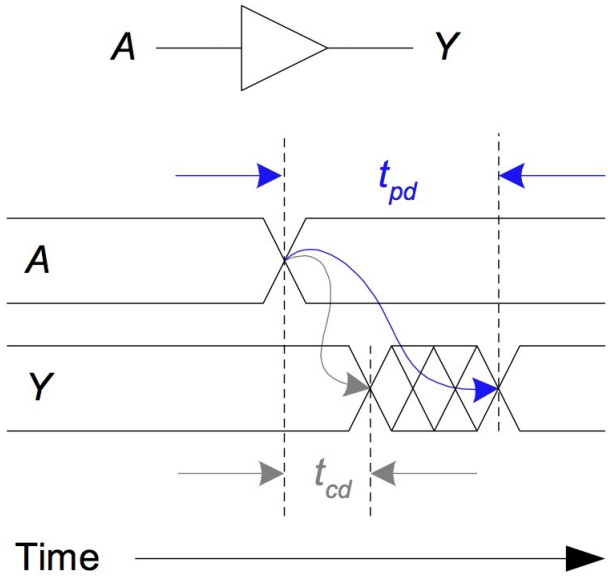


  - Delay is caused by
    * capacitance and resistance in a circuit
    * Speed of light limitation (not as fast as you think)
  - Reasons why $t_{pd}$ and $t_{cd}$ may be different:
    * Different rising and falling delays
    * Multiple inputs and outputs, some of which are faster than other
    * Circuits slow down when hot and speed up when cold
  - Critical (Long) and short paths

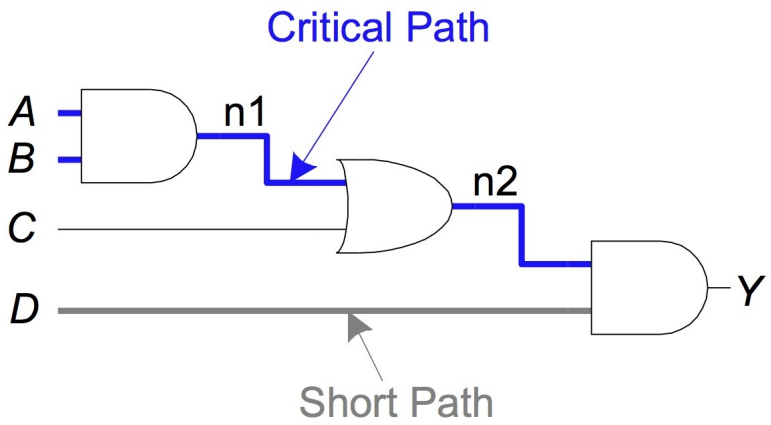


    * Critical (Long) path: $t_{pd} = 2t_{pd_\text{AND}} + t_{pd_\text{OR}}$
    * Short path: $t_{cd} = t_{cd_\text{AND}}$
  - Propagation Times

| Gate | $t_{pd}$(ps) |
|---|---|
| NOT | 30 |
| 2−input AND | 60 |
| 3−input AND | 80 |
| 4−input OR | 90 |
| tristate ($A$ to $Y$) | 50 |
| tristate (enable to $Y$) | 35 |

- Glitches
  - Glitch: when a single input change causes multiple output changes
  - Glitches don't cause problems because of synchronous design conventions
  - But it's important to recognize a glitch when you see one in timing diagrams
  - In general a glitch can occur when a change in a single variable crosses the boundary between two prime implicants in a $K-$map.
  - You **can't** get rid of all glitches - simultaneous transitions on multiple inputs can also cause glitches

# 6 Field Programmable Gate Array (FPGA)

- Logic arrays
  - Programmable logic arrays (PLAs)
    * AND array followed by OR array
    * Perform combinational logic only
    * Fixed internal connections
    * Composed of:
      · LUTs (LookUp Tables): perform combinational logic

        - Flip-flops: perform sequential functions
        - Multiplexers connect LUTs and flip-flops
  - Field programmable gate arrays (FPGAs)
    * Array of configurable logic blocks (CLBs)
    * Perform combinational and sequential logic
    * Programmable internal connections
    * Composed of:
      - CLBs (Configurable Logic Blocks): Perform logic

        too deeply nested

      - **LUT**s (**L**ook**U**p **T**ables): perform combinational logic
      - Flip-flops: performs sequential functions
      - Multiplexers: connect LUTs and flip-flops

        fino qua

      - IOBs (Input/Output Buffers): Interface with outside world
      - Programmable interconnection: connect CLBs and IOBs
    * Some FPGAs include other building blocks such as multipliers and RAMs

# 7 Verilog for Combinational Circuits

- Two hardware description languages
  - Verilog
    * Developed in 1984
    * Became an IEEE standard (1364) in 1995
    * More popular in US
  - VHDL
    * Developed in 1981
    * Became an IEEE standard (1076) in 1987
    * More popular in Europe

    We used Verilog
- Defining a module
  - A module is the main buliding block in Verilog
  - Need to declare:
    * Name of the module
    * Types of its connections (input, output)
    * Names of its connections

*The following two codes are identical*

```
module test ( a, b, y );
        input a;
        input b;
        output y;

endmodule
```

```
module test ( input a,
              input b,
              output y );

endmodule
```

- You can also define multi-bit busses
  - [`range_start : range_end`]

  *Example*

```
input  [31:0] a;   // a[31], a[30] .. a[0]
output [15:8] b1;  // b1[15], b1[14] .. b1[8]
output [7:0]  b2;  // b2[7], b2[6] .. b1[0]
input         clk; // single signal
```

- Basic Syntax
  - Verilog is case sensitive:
    * SomeName **and** somename **are not the same!**
  - Names cannot start with numbers:
    * 2good **is not a valid name**
  - White space is ignored
  - Comments
    * Single Line comment starts with //
    * Multiline comments start and end with /*...*/

    Remember:
    * Use a consistent naming style
    * Use MSB to LSB ordering for busses, e.g a[31:0]and not a[0:31]
    * Define one module per file, it makes managing your design hierarchy easier
    * Use a file name that equals your module name
- Two main HDL's styles
  - Structural
    * Describe how modules are interconnected
    * Each module contains other modules (instances) and interconnections between them
    * Describes a hierarchy
  - Behavioral
    * The module body contains functional description of the circuit
    * Contains logical and mathematical operators

quando togli il todo, il titolo dell'immagine e l'immagine vengono separati su due pagine

*Structural HDL Example*

```
module top (A, SEL, C, Y);
  input A, SEL, C;
  output Y;
  wire n1;

// alternative
small i_first ( A, SEL, n1 );

/* Shorter instantiation,
   pin order very important */

// any pin order, safer choice
small i2 ( .B(C),
           .Y(Y),
           .A(n1) );

endmodule
```

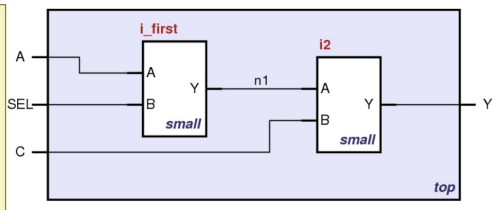


```
module small (A, B, Y);
  input A;
  input B;
  output Y;

// description of small

endmodule
```

- Behavioral HDL: Defining Functionality

```
module example (a, b, c, y);
      input a;
      input b;
      input c;
      output y;

// here comes the circuit description
assign y = ~a & ~b & ~c |
           a & ~b & ~c |
           a & ~b &  c;

endmodule
```

- Bitwise Operators

```
module gates(input  [3:0]  a, b,
             output [3:0] y1, y2, y3, y4, y5);

   /* Five different two-input logic
      gates acting on 4 bit busses */

   assign y1 = a & b;     // AND
   assign y2 = a | b;     // OR
   assign y3 = a ^ b;     // XOR
   assign y4 = ~(a & b); // NAND
   assign y5 = ~(a | b); // NOR

endmodule
```

- Reduction Operators

```
module and8(input  [7:0] a,
            output       y);

   assign y = &a;

   // &a is much easier to write than
   // assign y = a[7] & a[6] & a[5] & a[4] &
   //            a[3] & a[2] & a[1] & a[0];

endmodule
```

- Conditional Assignments

```
module mux4(input  [3:0] d0, d1, d2, d3
            input  [1:0] s,
            output [3:0] y);

   assign y = s[1] ? ( s[0] ? d3 : d2)
                   : ( s[0] ? d1 : d0);
  // if (s1) then
  //      if (s0) then y=d3 else y=d2
  // else
  //      if (s0) then y=d1 else y=d0

endmodule
```

```
module mux4(input  [3:0] d0, d1, d2, d3
            input  [1:0] s,
            output [3:0] y);

   assign y = (s == 2'b11) ? d3 :
              (s == 2'b10) ? d2 :
              (s == 2'b01) ? d1 :
              d0;
// if      (s = "11" ) then y= d3
// else if (s = "10" ) then y= d2
// else if (s = "01" ) then y= d1
// else                     y= d0

endmodule
```

- How to express numbers

N'Bxx

8'b0000_0001

  - (N) Number of bits
    - Expresses how many bits will be used to store the value
  - (B) Base
    - Can be n (binary), h (hexadecimal), d (decimal), o (octal)
  - (xx) Number
    - The value expressed in base, aparto from numbers it can also have X and Z as values
    - Underscore_ can be used to improve readability

- Number representation in Verilog

| Verilog | Stored Number |
|---|---|
| $4'b1001$ | 1001 |
| $8'b1001$ | 0000 1001 |
| $8'b0000_1001$ | 000 1001 |
| $8'bxX0X1zZ1$ | $XX0X$ $1ZZ1$ |
| $'b01$ | 0000...0001 |
| $4'd5$ | 0101 |
| $12'hFA3$ | 1111 1001 0011 |
| $8'o12$ | 00 001 010 |
| $4'h7$ | 0111 |
| $12'h0$ | 0000 0000 0000 |

non so cosa ce di importante da aggiungere...

# 8 Sequential Logic Design

- Introduction
  - Outputs of sequential logic depend on current ad prior input values, it has memory.
  - State: all the information about a circuit necessary to explain its future behavior
  - Latches nd flip-flops: state elements that store one bit of state
  - Synchronous sequentila circuits: combinational logic followed by a bank of flip-flops
- Sequential Circuits
  - Give sequence to events
  - Have memory (short-term)
  - Use feedback from output t input to store information
- State Elements
  - The state of a circuit influences its future behavior
  - State elements store state
  - Bistable circuits
    * SR Latch
    * D Latch
    * D Flip-flop
- The way a circuit remembers
  - Bistable circuits can have two distinct states, once they are in one state, they will remain there.

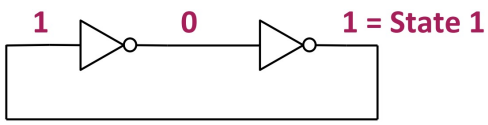

  - We can move from one state to another by simply adding one switch to break the loop and at the same time add another switch that connects an input to the circuit.

- The D Latch
  - It is the basic bi-stable circuit used in modern CMOS.
  - The clock controls the switches, Only one is active at a time.
  - Traditionally the input is called D (Data) and the output Q

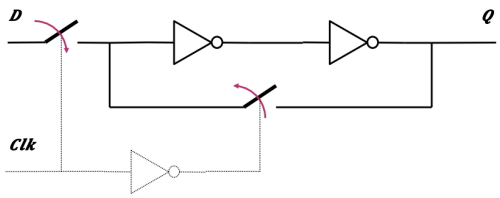


  - It has two nodes
    * Latch mode, loop is active, input disconected, keeps state (output is stored)

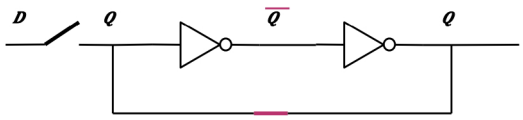


    * Transparent mode, loop is inactive, input is connected and propagates to output

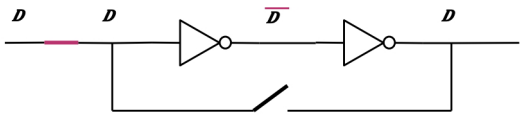


- Rising edge triggered D Flip-Flop
  - Two inputs: CLK, D
  - Function
    * Te flip-flop "samples" D on the rising edge of CLK
    * When CLK rises from 0 to 1, D passes through to Q
    * Otherwise, Q holds its previous values
    * Q changesonly on the ising edge of CLK
  - A flip-flop is called an edge-triggered device because it is activated on the clock edge

- D FLip-Flop Internal Circuit
  - Two back-to-back latches (L1 and L2) controlled by complementary clocks
    * When CLK=0

        - L1 is transparent
        - L2 is opaque
        - D passes through to N1
    - When CLK=1
        - L2 is transparent
        - L1 is opaque
        - N1 passes thorugh to Q
    - Thus, on the edge of the clock (CLK rises from 0 to 1), D passes through Q

- Registers
  - Multiple parallel flip-flops that store mor than 1 bit

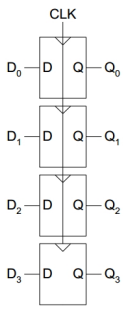


- Enabled Flip-Flops
  - Inputs: CLK, D, EN
    - The enable input (EN) controls when new data (D) is stored
  - Function
    - EN=1: D passes through to Q on the clock edge
    - EN=0: the flip-flop retains its previous state

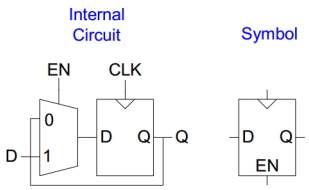


- Resettable Flip-Flops
  - Inputs: CLK, D, Reset
    - The reset is used to set the output to 0.
  - Function:
    - Reset=1: Q is forced to 0
    - Reset=0: the flip-flop behaves like an ordinary D flip-flop
  - Two types:

    * Synchronous: resets at the clock edge only
    * Asynchronous: resets immediately when Reset=1 (requires changing the internal circuitry of the flip-flop)

Figures/ResettableFLip-Flops.jpg

- Settable Flip-Flops
  - Inputs: CLK, D, Set
  - Function:
    * Set=1: Q is set to 1
    * Set=0: the flip-flop behaves like an ordinary D flip-flop

Figures/SettableFlip-FLops.jpg

- Sequential Logic
  - Sequential Logic: all circuits that aren't combinational
  - A problematic circuits:
    * It is an unstable circuit that oscillates
    * Its period depends on the delay of the inverters which depends on the manufacturing process, temperature, etc
    * The circuit has a cyclic path: output fed back o input
- Synchronous Sequential Logic Design
  - Breaks Cyclic paths by inserting registers
    * These registers contain the state of the system
    * The state changes at the clock edge, so we say the system is synchronized to the clock
  - Rules of synchronous sequential circuit composition
    * Every circuit element is either a register or a combinational circuit
    * At least one circuit element is a register
    * All registers receive the same clock signal
    * Every cyclic path contains at least one register
  - Two common synchronous sequential circuits

    * Finite State Machines (FSMs)
    * Pipelines

- Finite State Machine (FSM) consits of:
  - State register:
    * Store the current state and load the next state at the clock edge
    * Sequetial circuit

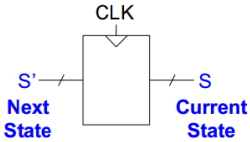


  - Next state logc
    * Determines what the next state will be
    * Combinational Circuit

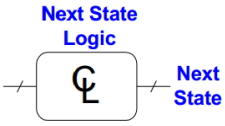


  - Output logic
    * Generates the outputs
    * Combinational Circuit

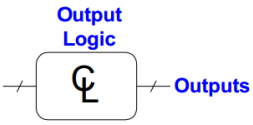


  - FSMs get their name because a circuit with $k$ registers can be in one of a finite number $\left(2^k\right)$ of unique states.
  - Next state is determined by the current state and the inputs
  - Two types of FSMs differ in the ouput logic:
    * **Moore FSM**: Outputs depend only on the current state
    * **Mealy FSM**: Outputs depend on the current state and the inputs

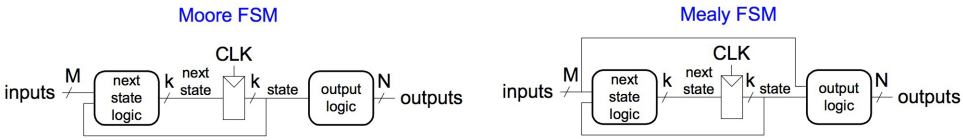


  - Example: See slides 30-47

- Factoring FSMs: Break complex FSMs into smaller interacting FSMs

- FSM Design Procedure:
  - Prepare
    - identify the inputs and outputs
    - Sketch a state transition diagram
    - Write a state transition table
    - Select state encodings
  - For a Moore Machine
    - Rewrite the state transition table with the selected state encodings
    - Write the output table
  - For a Mealy Machine
    - Rewrite the combined state transition and output table with the selected state encodings
  - Write boolean equations for the next state and output logic
  - Sketch the circuit schematic

# 9 Verilog for Sequential Circuits

Add something about async vs sync

- Sequential Logic in Verilog:
  - Define blocks that have memory (Flip-Flops, Latches, FSMs)
  - Sequential Logic is triggered by a "CLOCK" event
    - Latches are sensitive to the level of the signal
    - Flip-flops are sensitive to the transitioning of clock
  - Combinational constructs are not sufficient. We need new constructs: *always* and *initial*
- Always statement, Defining processes
  - Whenever the event in the sensitivity list occurs, the statement is executed

```
always @ (sensitivity list)
      statement;
```

  - Example: D Flip-Flop

```
module flop(input            clk,
            input      [3:0] d,
            output reg [3:0] q);

  always @ (posedge clk)
    q <= d;                // pronounced "q gets d"

endmodule
```

    * The posedge defines a rising edge (transition from 0 to 1)
    * This process triggers only if the clk signal rises
    * Once it rises, the value of $d$ will be copied to $q$
    * "assign" statement is not used within always block
    * The <= describes a "non-blocking"[2] assignment
    * Assigned variables need to be declared as **reg** (doesn't necessarily mean that it is a register)

- Always blocks for combinational Circuits
  - If the statement define the signals completely, nothing is memorized, block becomes combinational.
  - Always blocks allow powerful statements (**if... then... else**), **case**)
  - Use always blocks only if it makes your job easier

- Non-blocking and Blocking Statements:

**Non-blocking**

```
always @ (a)
begin
   a <= 2'b01;
   b <= a;
// all assignments are made here
// b is not (yet) 2'b01
end
```

**Blocking**

```
always @ (a)
begin
   a = 2'b01;
// a is 2'b01
   b = a;
// b is now 2'b01 as well
end
```

  - Non-blocking:
    * Values are assigned at the end of the block
    * All assignments are made in parallel, process flow is not-blocked
  - Blocking
    * Value is assigned immediately
    * Process waits until the first assignment is complete, it blocks progress

- Why use (Non-)Blocking Statements?
  - There are technical reasons for each
  - Blocking statements allow sequential descriptions
  - If the sensitivity list is correct, blocks with non-blocking statements will always evaluate to the same result

- Rules for Signal Assignment
  - Use **always @(posedge clk)** and non-blocking assignments (<=) to model synchronous sequential logic.
  - Use continuous assignments (**assign ...**) to model simple combinational logic (**assign** $y = a\&b$)

[2] More on this later

- Use **always @(*)** and blocking assignments (=) to model more complicated combinational logic where the always statement is helpful
- Do not make assignments to the same signal in more than one always statement or continuous assignment statement

- Example of Verilog + FSM on slides 44-50

# 10 Sequential Circuits: Timing

- Timing
  - Flip-Flop samples $D$ at clock edge
  - $D$ must be stable when it is sampled
  - Similar to a photograph, $D$ must be stable around the clock edge
  - If $D$ is changing when it is sampled, **metastability** can occur (See again "rising edge of the clock" concept)
- Input Timing Constraints
  - Setup time: $t_{\text{setup}}$ = time before the clock edge that data must be stable (i.e. not changing)
  - Hold time: $t_{\text{hold}}$ = time after the clock edge that data must be stable
  - Aperture time: $t_a$ = time around clock edge that data must be stable ($t_a = t_{\text{setup}} + t_{\text{hold}}$)

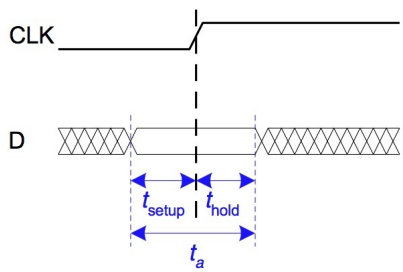


- Output Timing Constraints
  - Propagation delay: $t_{\text{pcq}}$ = time after clock edge that the output $Q$ is guaranteed to be stable (i.e. to stop changing)
  - Contamination delay: $t_{\text{ccq}}$ = time after clock edge that $Q$ might be unstable (i.e. start changing)

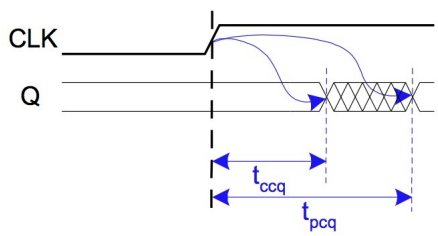

- Dynamic Discipline
  - The input to a sync. seq. circuit must be stable during the aperture (setup and hold) time around the clock edge
  - Specifically, the input must be stable
    * at least $t_{\text{setup}}$ before the clock edge
    * at least until $t_{\text{hold}}$ after the clock edge

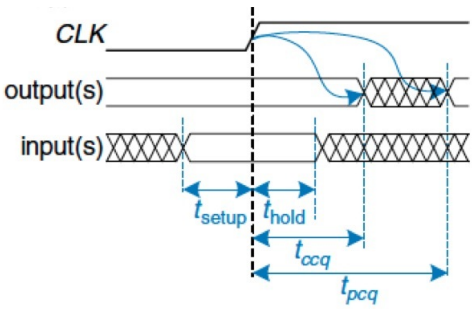


  - The delay between registers has a minimum and maximum delay, dependent on the delays of the circuit elements

- Setup Time Constraints
  - The clock period or cycle time $T_{c'}$ is the time between rising edges of a repetitive clock signal. Its reciprocal $f_c = \frac{1}{T_{c'}}$ is the clock frequency
  - All else being the same, increasing the clock frequency increases the work that a digital system can accomplish per unit time
  - The setup time constraint depends on the maximum delay from register $R1$ through the combinational Logic
  - The input to register $R2$ must be stable at least $t_{\text{setup}}$ before the clock edge

$$T_c \geq t_{\text{pcq}} + t_{\text{pd}} + t_{\text{setup}}$$
$$t_{\text{pd}} \leq T_c - (t_{\text{pcq}} + t_{\text{setup}})$$

- Hold Time Constraint
  - The hold time constraint depends on the minimum delay from register $R1$ through the combinational logic
  - The input to register $R2$ must be stable for at least $t_{\text{hold}}$ after the clock edge

$$t_{\text{hold}} < t_{\text{ccq}} + t_{\text{cd}}$$
$$t_{\text{cd}} > t_{\text{hold}} - t_{\text{ccq}}$$

- Clock Skew
  - The clock doesn't arrive at all registers at the same time
  - Skew is the difference between two clock edges

- Examine the worst case to guarantee that the dynamic discipline is not violated for any register - many registers in a system

- Metastability
  - Any bi-stable device has two stable states and a metastable state between them
  - A flip-flop has two stable states (1 and 0) and one metastable state
  - If a flip-flop lands in the metastable state, it could stay there for an undetermined amount of time
  - $\frac{T_0}{T_c}$ describes the probability that the input changes at a bad time

$$P(t_{\text{res}} > t) = \left(\frac{T_0}{T_c}\right) \cdot e^{-\frac{t}{\tau}}$$

  - $\tau$: a time constant indicating how fast the flip flop moves away from the metastable state
  - If a flip-flop samples a metastable input, if you wait long enough, the outputs resolves itself

- Synchronizers
  - Ansynchronous inputs are inevitable (user interfaces, different clocks, etc.)
  - The goal of a synchronizer is to make the probability of failure (the output $Q$ still being metastable) low
  - A synchronizer cannot make the probability of failure 0
  - Internals:
    * A synchronizer can be built with two back-to-back flip-flops
    * Suppose the input $D$ is changing when it is sampled by $F1$
    * Internal signal $D2$ has $(T_c - t_{\text{setup}})$ time to resolve a 1 or 0
  - Probability of failure:
    * For each sample, the probability of failure of this synchronizer is:

$$P(\text{failure}) = \frac{T_0}{T_c} \cdot e^{-\frac{T_c - t_{\text{setup}}}{\tau}}$$

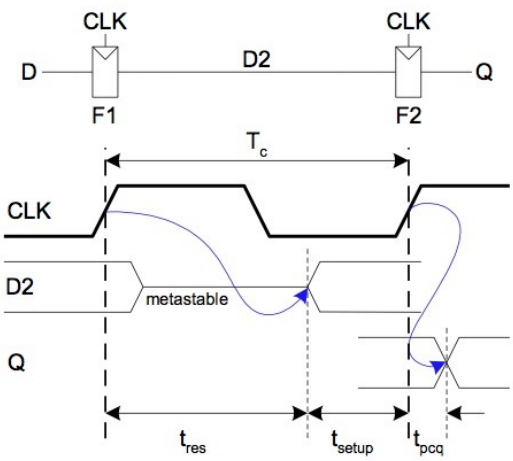

- Mean time before failure:
  * If the asynchronous input changes once per second, the probability of failure per second of the synchronizer is simply $P(\text{failure})$.
  * In general, if the input changes $N$ times per second, the probability of failure of the synchronizer is:

$$\frac{P(\text{failure})}{\text{sec}} = N \cdot \frac{T_0}{T_c}^{-\frac{T_c - t_{\text{setup}}}{\tau}}$$

  * and the Mean Time Before Failure (MTBF):

$$\text{MTBF} = \frac{T_c \cdot e^{-fracT_c - t_{\text{setup}}\tau}}{NT_0}$$

- Parallelism:
  - Two types of parallelism:
    * Spatial Parallelism: duplicate hardware performs multiple tasks at once
    * Temporal parallelism
      · Task is broken into multiple stages
      · Also called pipelining
      · Think an assembly line
  - Some definitions:
    * Token: A group of inputs processed to produce a group of outputs
    * Latency: Time for one token to pass from start to end
    * Throughput: The number of tokens that can be produced per unit time
  - Parallelism increases throughput