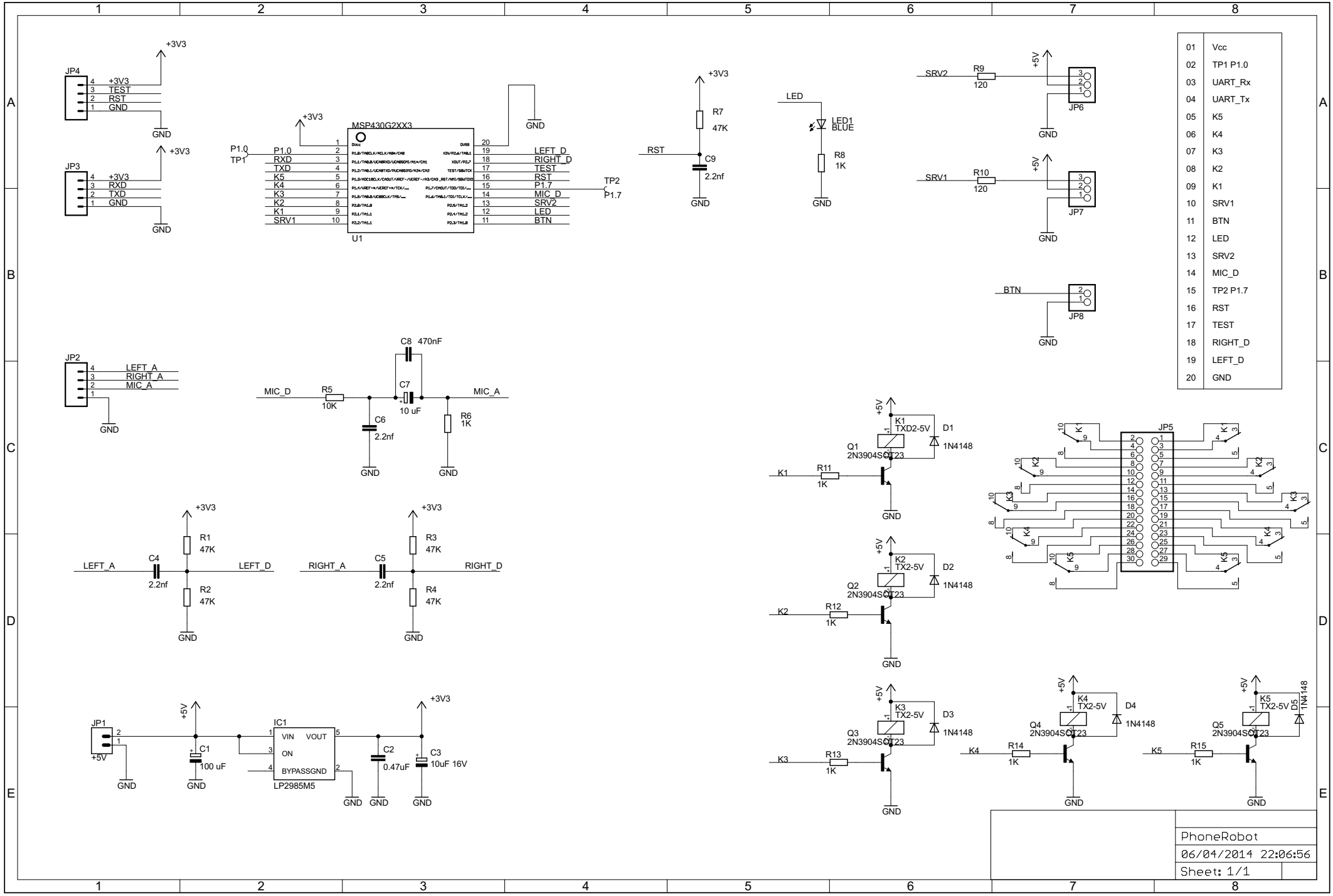
JP4
+3V3
TEST
RST
GND
JP3
RXD
TXD
MSP430G2XX3
U1
P1.0
TP1
LEFT_D
RIGHT_D
TEST
RST
P1.7
MIC_D
SRV2
LED
BTN
TP2
P1.7
R7
47K
C9
2.2nf
LED
LED1
BLUE
R8
1K
SRV2
R9
120
JP6
SRV1
R10
JP7
BTN
JP8
JP2
LEFT_A
RIGHT_A
MIC_A
C8 470nF
C7
10 uF
R5
10K
C6
2.2nf
R6
1K
R1
47K
R2
47K
C4
2.2nf
R3
47K
R4
47K
C5
2.2nf
JP1
IC1
VIN
VOUT
ON
BYPASSGND
LP2985M5
C1
100 uF
C2
0.47uF
C3
10uF 16V
K1
TXD2-5V
D1
1N4148
Q1
2N3904SOT23
R11
1K
K2
TX2-5V
D2
Q2
R12
K3
D3
Q3
R13
K4
D4
Q4
R14
K5
D5
Q5
R15
JP5
01 Vcc
02 TP1 P1.0
03 UART_Rx
04 UART_Tx
05 K5
06 K4
07 K3
08 K2
09 K1
10 SRV1
11 BTN
12 LED
13 SRV2
14 MIC_D
15 TP2 P1.7
16 RST
17 TEST
18 RIGHT_D
19 LEFT_D
20 GND
PhoneRobot
06/04/2014 22:06:56
Sheet: 1/1