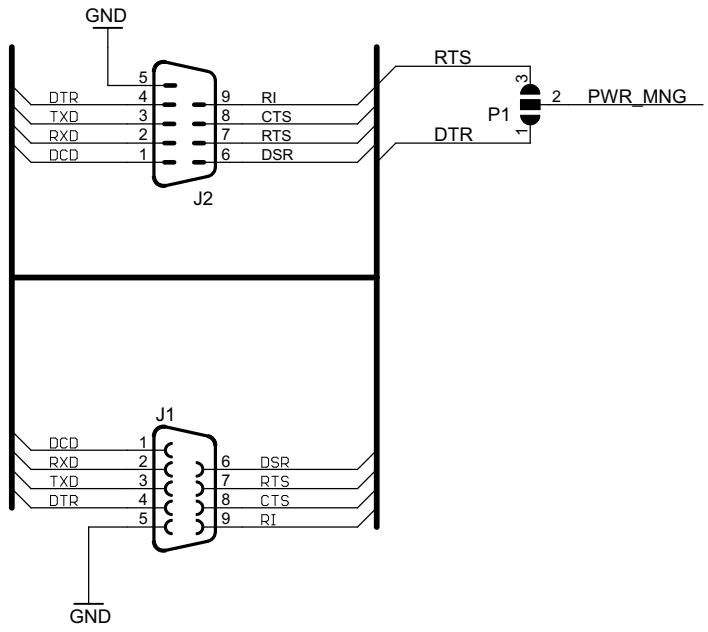

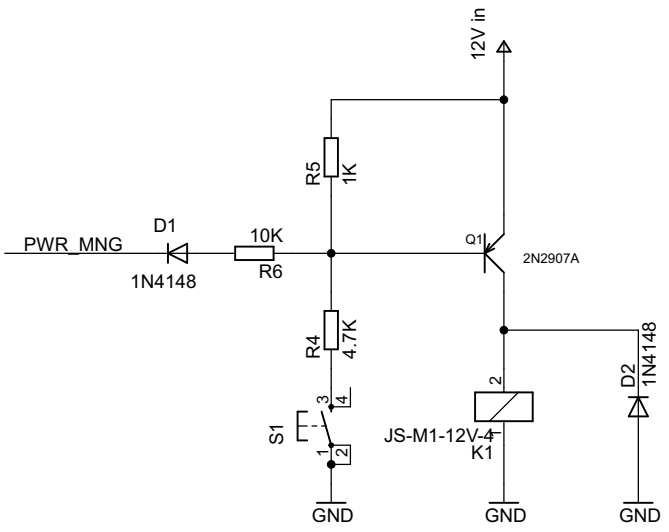

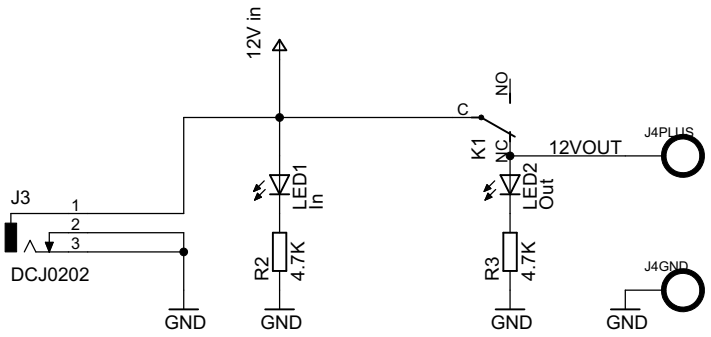

open hardware

POWSER 2012

TITLE: powser.v1

Document Number:

REV:

Date: not saved!

Sheet: 1/1