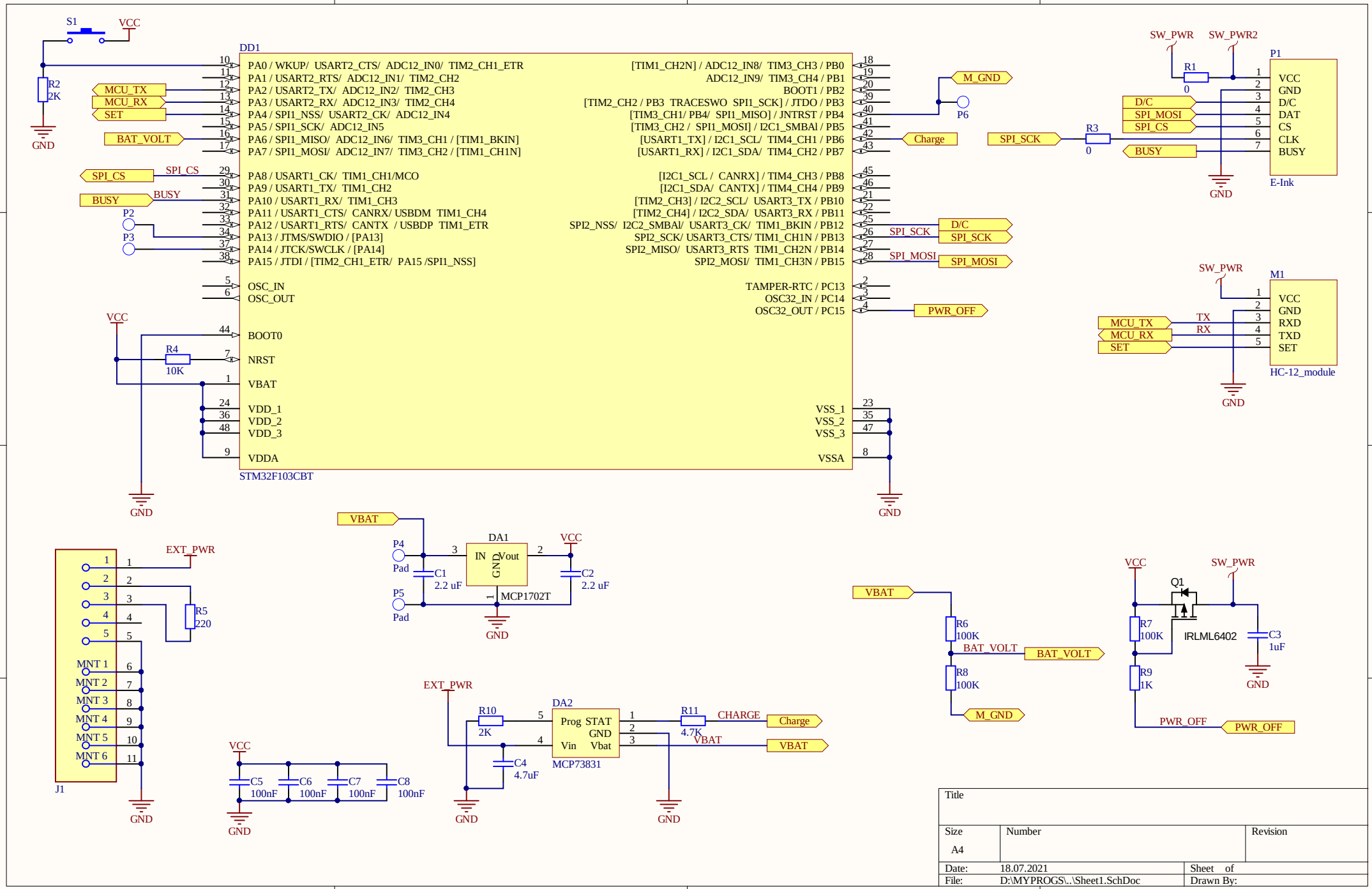

Title		
Size A4	Number	Revision
Date: 18.07.2021		Sheet of
File: D:\MYPROGS\..\Sheet1.SchDoc		Drawn By: