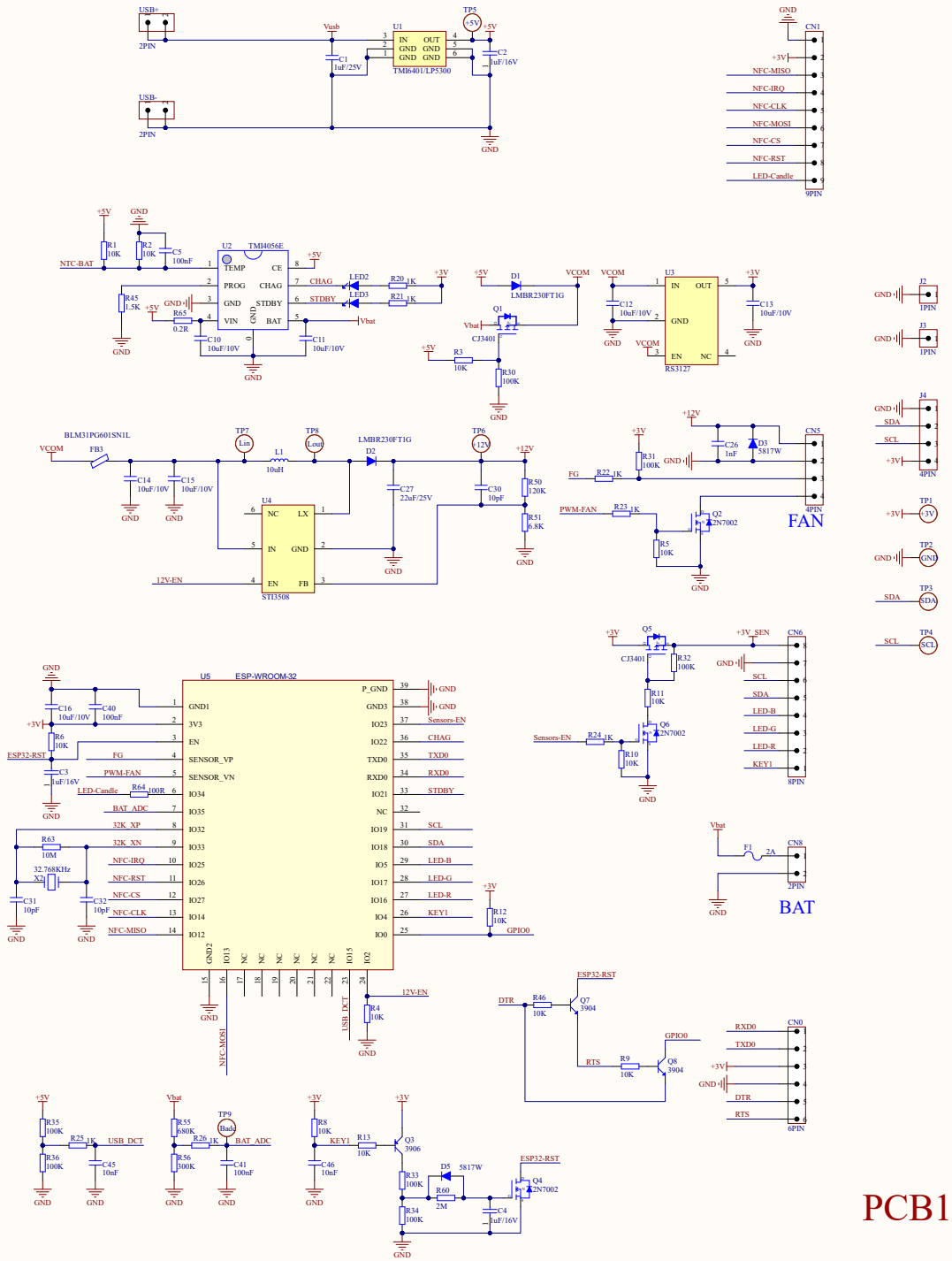


Type your text