28V High Efficiency 1MHz Step Up Regulator

FEATURES

- Integrated 80mΩ Power MOSFET
- 2.7V to 24V Input Voltage
- 1MHz Fixed Switching Frequency
- Internal 3A Switch Current Limit
- Adjustable Output Voltage
- Internal Compensation
- Up to 28V Output Voltage
- Automatic Pulse Frequency Modulation Mode at Light Loads
- Available in a 6-Pin SOT23-6 Package

APPLICATIONS

- Battery-Powered Equipment
- Set-Top Boxed
- White LED Driver
- Power Bank
- DSL and Cable Modems and Routers

GENERAL DESCRIPTION

The STI3508 is a constant frequency, 6-pin SOT23 current mode step-up converter intended for small, low power applications. The STI3508 switches at 1MHz and allows the use of tiny, low cost capacitors and inductors 2mm or less in height. Internal soft-start results in small inrush current and extends battery life.

The STI3508 features automatic shifting to pulse frequency modulation mode at light loads. The STI3508 includes under-voltage lockout, current limiting, and thermal overload protection to prevent damage in the event of an output overload. The STI3508 is available in a small SOT23-6 package.

APPILCATIONS CIRCUITS

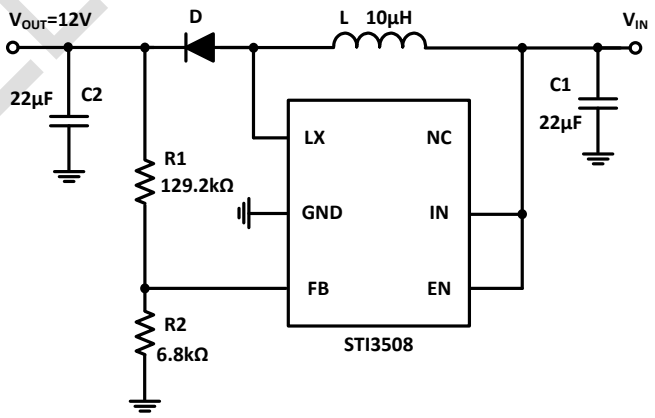

Figure 1. Basic Application Circuit

TOLL Microelectronic

ABSOLUTE MAXIMUM RATINGS (Note 1)

Parameter	Min	Max	Unit
Input Supply Voltage	-0.3	24	V
LX Voltages	-0.3	30	V
EN Voltage	-0.3	24	V
FB Voltage	-0.3	6	V
Junction Temperature (Note2)	-40	155	°C
Power Dissipation		500	mW
Lead Temperature (Soldering, 10s)		260	°C

PACKAGE/ORDER INFORMATION

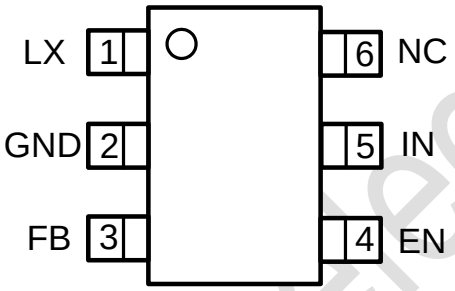

SOT23-6

Top Mark: S35BXXX (S35B: Device Code, XXX: Inside Code)

Part Number	Package	Top mark	Quantity/ Reel
STI3508	SOT23-6	S35BXXX	3000

STI3508 devices are Pb-free and RoHS compliant.

TOLL Microelectronic

PIN DESCRIPTIONS

Pin	Name	Function
1	LX	Power Switch Output. LX is the drain of the internal MOSFET switch. Connect the power inductor and output rectifier to LX.
2	GND	Ground Pin
3	FB	Feedback Input. The FB voltage is 0.6V. Connect a resistor divider to FB.
4	EN	Regulator On/Off Control Input. A high input at EN turns on the converter, and a low input turns it off. When not used, connect EN to the input supply for automatic startup.
5	IN	Input Supply Pin. Must be locally bypassed.
6	NC	No Connection

ESD RATING

Items	Description	Value	Unit
V_{ESD}	Human Body Model for all pins	±2000	V

JEDEC specification JS-001

RECOMMENDED OPERATING CONDITIONS

Items	Description	Min	Max	Unit
Voltage Range	IN	2.7	24	V
T_J	Operating Junction Temperature Range	-40	125	°C

TOLL Microelectronic

ELECTRICAL CHARACTERISTICS

(V_{IN} = V_{EN} = 5V, T_A = 25°C, unless otherwise noted.)

Parameter	Conditions	Min	Typ	Max	Unit
Operating Input Voltage		2.7		24	V
Under Voltage Lockout	V_{IN} rising		2.4		V
Under Voltage Lockout Hysteresis			200		mV
Shutdown Current	V_{EN} = 0V		0.1	1	μA
Quiescent Current	V_{FB} =1.2V, No switch		100	350	μA
Switching Frequency			1		MHz
Maximum Duty Cycle			90		%
EN Input High Voltage		1.5			V
EN Input Low Voltage				0.4	V
FB Voltage		0.588	0.6	0.612	V
LX On Resistance			80		mΩ
LX Current Limit	V_{IN} = 5V, Duty cycle=50%		3		A
LX Leakage	V_{LX} = 12V			1	μA
Thermal Shutdown Threshold (Note 3)			155		°C
Thermal Shutdown Hysteresis (Note 3)			20		°C

Note 1: Absolute Maximum Ratings are those values beyond which the life of a device may be impaired.

Note 2: T_J is calculated from the ambient temperature T_A and power dissipation P_D according to the following formula: $T_J = T_A + P_D \times \theta_{JA}$.

Note 3: Thermal shutdown threshold and hysteresis are guaranteed by design.

TOLL Microelectronic

OPERATION

The STI3508 uses a fixed frequency, peak current mode boost regulator architecture to regulate voltage at the feedback pin. The operation of the STI3508 can be understood by referring to the block diagram of Figure 2. At the start of each oscillator cycle the MOSFET is turned on through the control circuitry. To prevent sub-harmonic oscillations at duty cycles greater than 50 percent, a stabilizing ramp is added to the output of the current sense amplifier and the result is fed into the negative input of the PWM comparator. When this voltage equals the output voltage of the error amplifier the power MOSFET is turned off. The voltage at the output of the error amplifier is an amplified version of the difference between the band gap reference voltage and the feedback voltage. In this way the peak current level keeps the output in regulation. If the feedback voltage starts to drop, the output of the error amplifier increases. These results in more current to flow through the power MOSFET, thus increasing the power delivered to the output. The STI3508 has internal soft start to limit the amount of input current at startup and to also limit the amount of overshoot on the output.

FUNCTIONAL BLOCK DIAGRAM

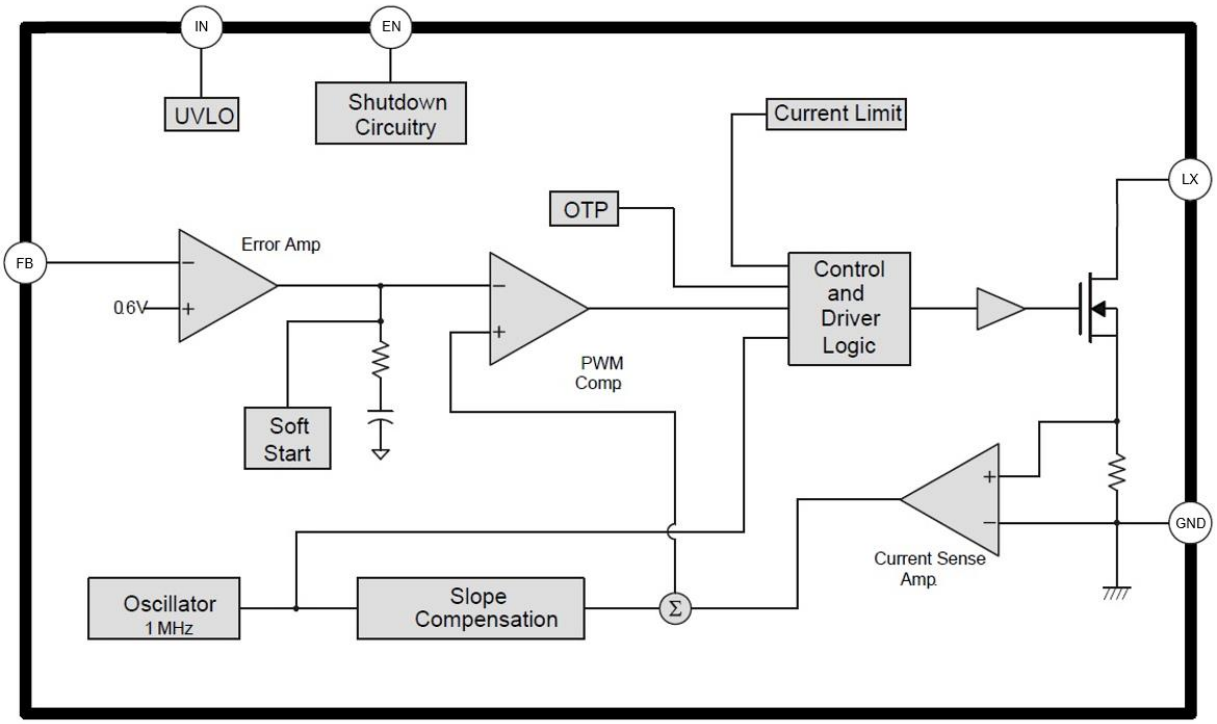

Figure 2. STI3508 Block Diagram

APPLICATION INFORMATION

Setting the Output Voltage

The internal reference V_{REF} is 0.6V (Typically). The output voltage is divided by a resistor divider, R1 and R2 to the FB pin. The output voltage is given by

$$V_{OUT} = V_{REF} \times (1 + \frac{R_1}{R_2})$$

Inductor Selection

The recommended values of inductor are 4.7µH to 22µH. Small size and better efficiency are the major concerns for portable device, such as STI3508 used for mobile phone. The inductor should have low core loss at 1MHz and low DCR for better efficiency. To avoid inductor saturation current rating should be considered.

Capacitor Selection

Input and output ceramic capacitors of 22µF are recommended for STI3508 applications. For better voltage filtering, ceramic capacitors with low ESR are recommended. X5R and X7R types are suitable because of their wider voltage and temperature ranges.

Diode Selection

Schottky diode is a good choice for STI3508 because of its low forward voltage drop and fast reverses recovery. Using Schottky diode can get better efficiency. The high-speed rectification is also a good characteristic of Schottky diode for high switching frequency. Current rating of the diode must meet the root mean square of the peak current and output average current multiplication as following:

$$I_D(RMS) \approx \sqrt{I_{OUT} \times I_{PEAK}}$$

The diode's reverse breakdown voltage should be larger than the output voltage.

Layout Consideration

For best performance of the STI3508, the following guidelines must be strictly followed.

1. Input and Output capacitors should be placed close to the IC and connected to ground plane to reduce noise coupling.
2. The GND should be connected to a strong ground plane for heat sinking and noise protection.
3. Keep the main current traces as possible as short and wide.
4. LX node of DC-DC converter is with high frequency voltage swing. It should be kept at a small area.
5. Place the feedback components as close as possible to the IC and keep away from the noisy devices.

TOLL Microelectronic

TYPICAL PERFORMANCE CHARACTERISTICS

(V_{IN}=5V, V_{OUT}=12V, C_{IN}=22µF, C_{OUT}=22µF, L=10µH, T_A=25°C, unless otherwise noted.)

Efficiency

V_{OUT}=5V, T_A=25°C, L=10µH

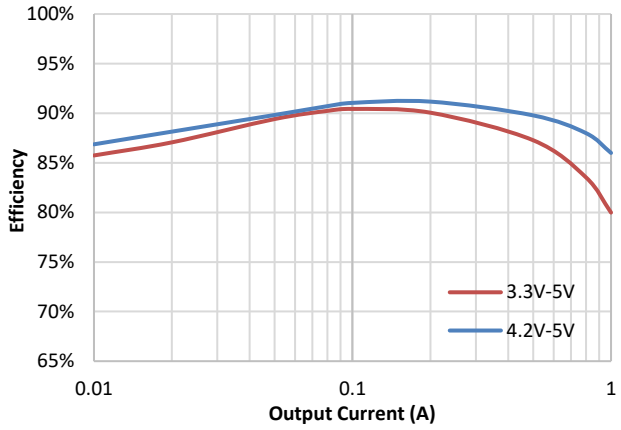

Efficiency

V_{OUT}=21V, T_A=25°C, L=22µH

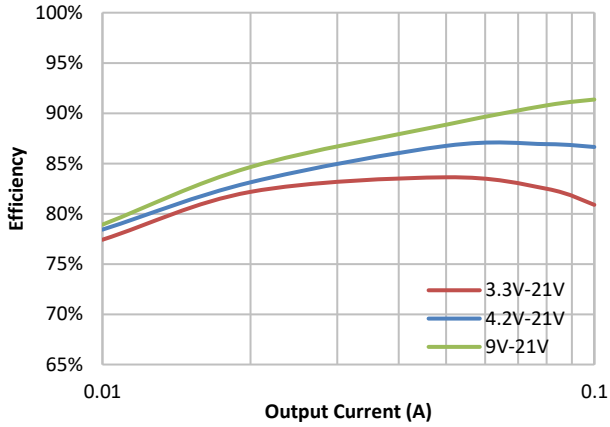

Steady State

V_{in}=5V, V_{OUT}=12V, I_{OUT}=0A, T_A=25°C

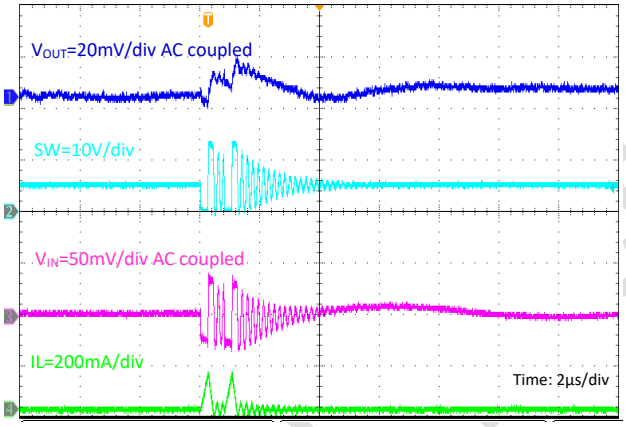

Steady State

V_{in}=5V, V_{OUT}=12V, I_{OUT}=0.5A, T_A=25°C

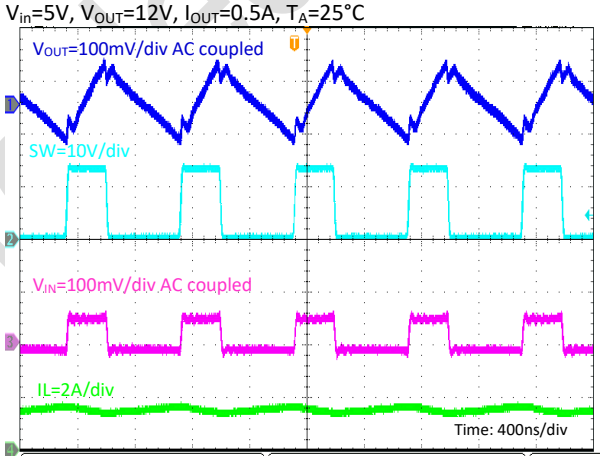

VIN Power On

V_{IN}=5V, V_{OUT}=12V, No load

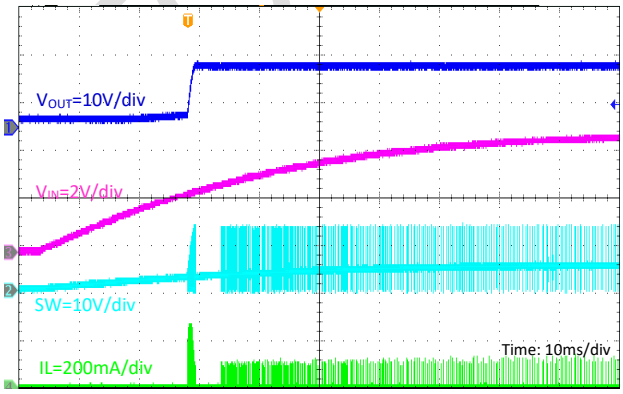

VIN Power Off

V_{IN}=5V, V_{OUT}=12V, No Load

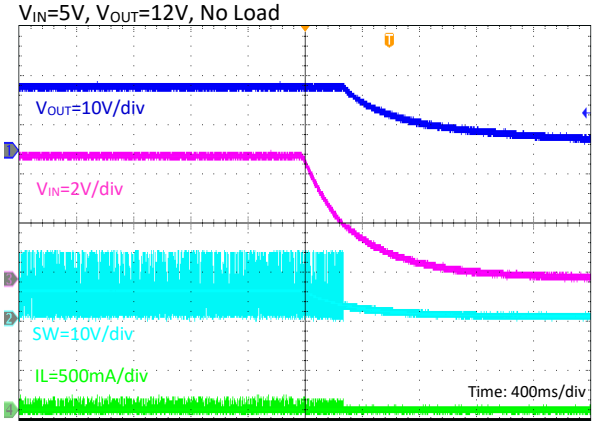

TYPICAL PERFORMANCE CHARACTERISTICS (Continued)

VIN Power On

V_{IN}=5V, V_{OUT}=12V, Io=0.5A

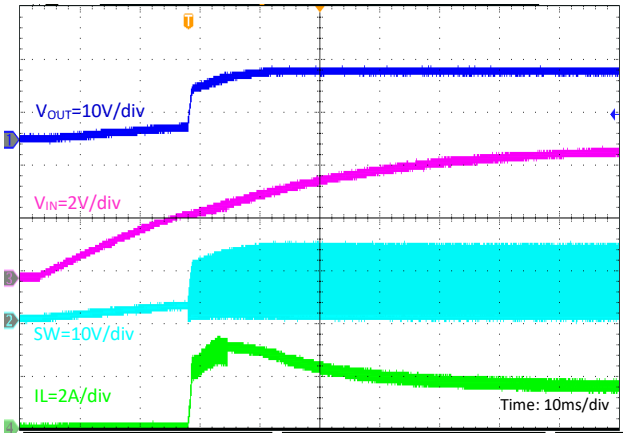

VIN Power Off

V_{IN}=5V, V_{OUT}=12V, Io=0.5A

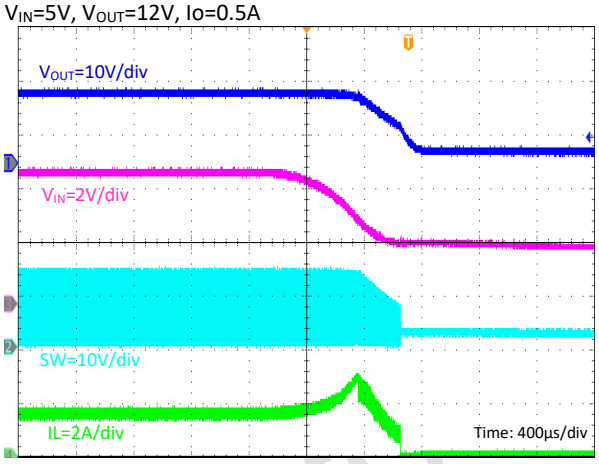

Power On through EN

V_{IN}=5V, V_{OUT}=12V, I_{OUT}=0.5A

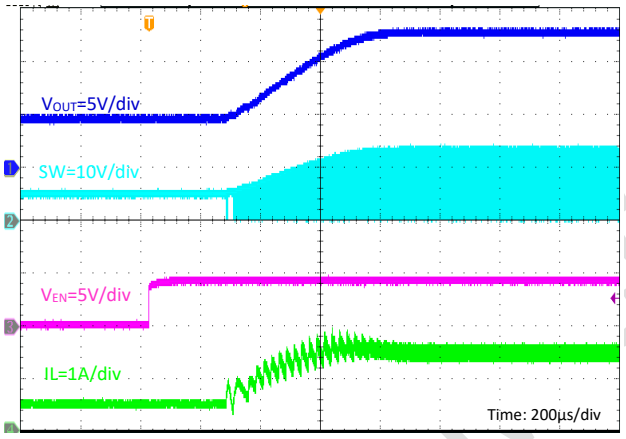

Power Off through EN

V_{IN}=5V, V_{OUT}=12V, I_{OUT}=0.5A

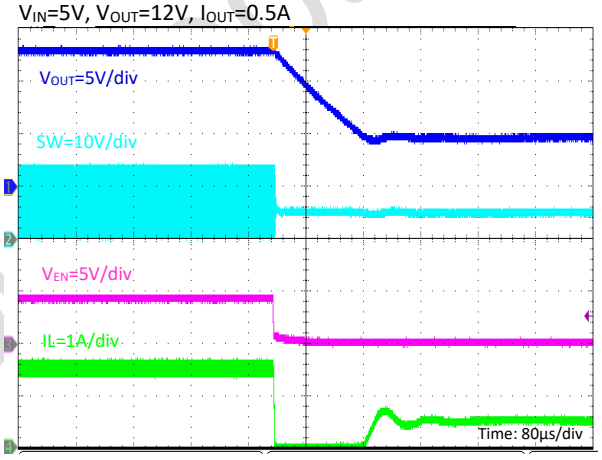

TOLL Microelectronic

PACKAGE INFORMATION

SOT23-6

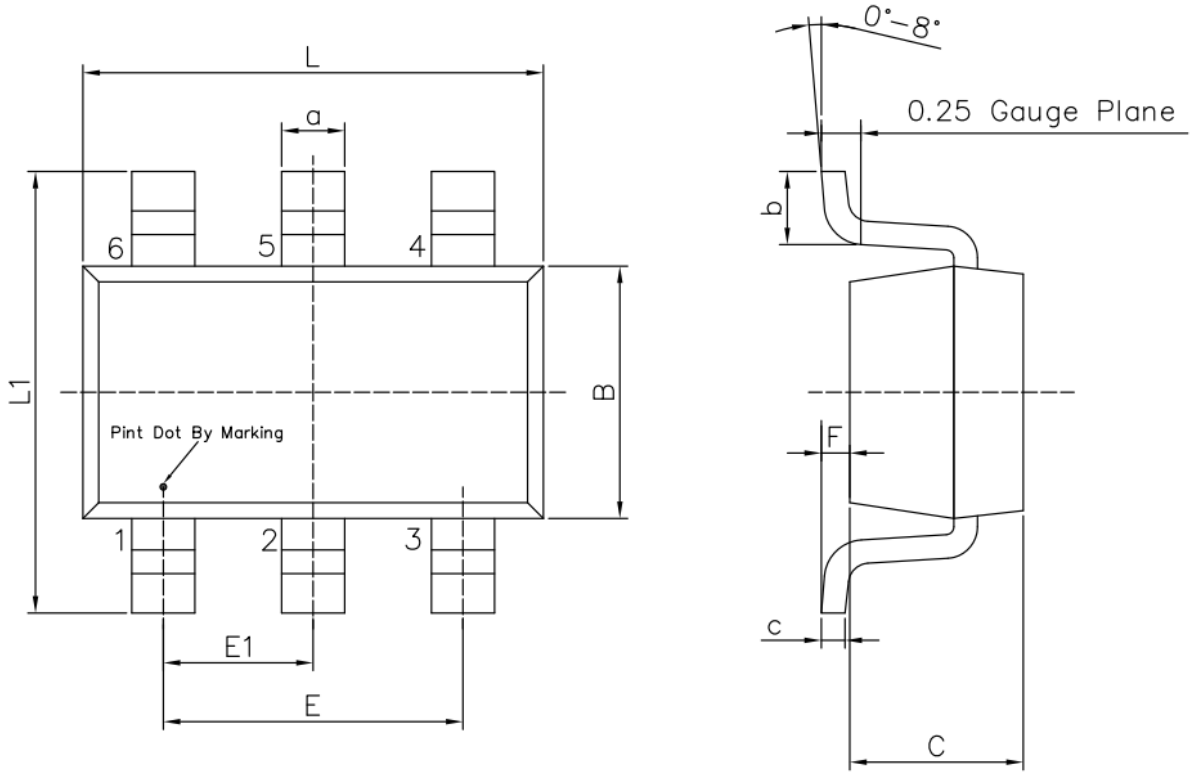

Unit: mm

Symbol	Dimensions In Millimeters		Symbol	Dimensions In Millimeters	
	Min	Max		Min	Max
L	2.82	3.02	E1	0.85	1.05
B	1.50	1.70	a	0.35	0.50
C	0.90	1.30	c	0.10	0.20
L1	2.60	3.00	b	0.35	0.55
E	1.80	2.00	F	0	0.15

Note:

1) All dimensions are in millimeters.
2) Package length does not include mold flash, protrusion or gate burr.
3) Package width does not include inter lead flash or protrusion.
4) Lead popularity (bottom of leads after forming) shall be 0.10 millimeters max.
5) Pin 1 is lower left pin when reading top mark from left to right.

TOLL Micro

TAPE AND REEL INFORMATION

TAPE DIMENSIONS: SOT23-6

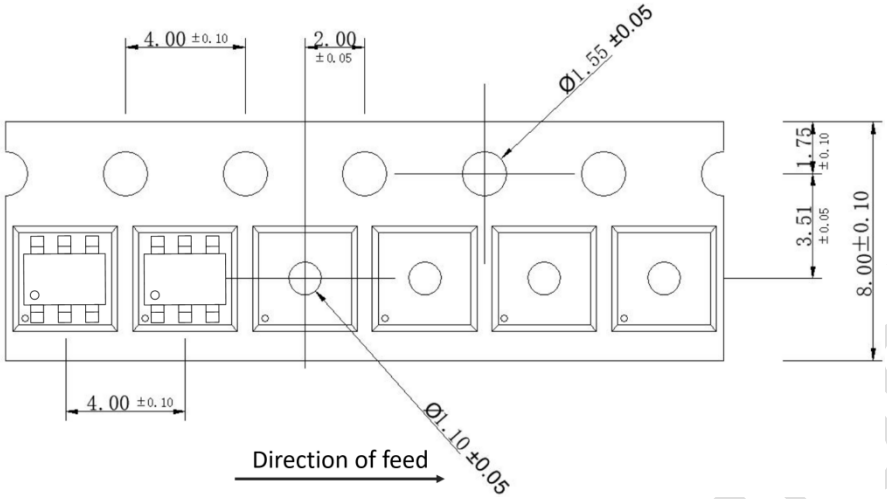

REEL DIMENSIONS: SOT23-6

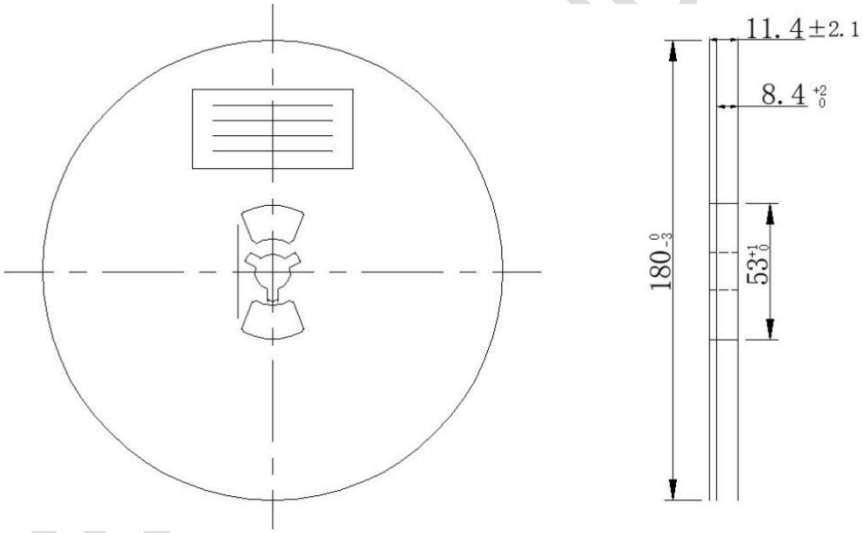

Note:

1) All Dimensions are in Millimeter
2) Quantity of Units per Reel is 3000
3) MSL level is level 3.

Unikeyic Electronics

Global Electronic Components Distributor

Click to view pricing, inventory, delivery, and lifecycle information:

TMI:

TMI3252SHF TMI5810 SIT8997D STI3508 TMI6240 TMI3181A TMI6050 STI9287 TMI3257I TMI8152 STI3408B TMI3113 TMI3113B TMI3252 TMI3253SH TMI3255SF TMI3342 TMI3113H2 TMI3253T TMI3408F TMI8110 TMI8122-Q1 TMI2242D TMI3252S TMI3252T TMI3253 TMI3493 TMI8116-Q1 TMI8260SP STI8070A