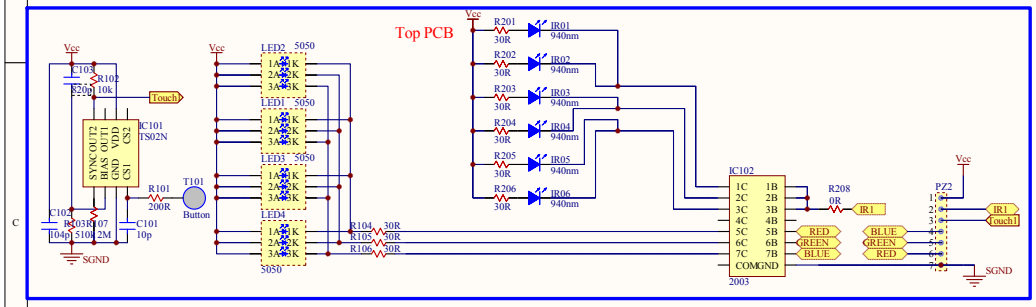

Title		
Size A3	Number	Revision
Date: 11-May-2017	Sheet of	
File: F:\dragon\2017\phoenix\phoenix 20170328\Phoenix 20170328.Ddb		