MAX14871_12V DC MOTOR SPEED CONTROLLER

DC INPUT WITH REVERSE POLARITY PROTECTION

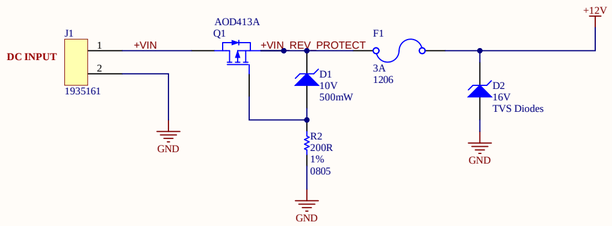

12V TO 5V DC/DC

Up to 2A, 84% efficiency

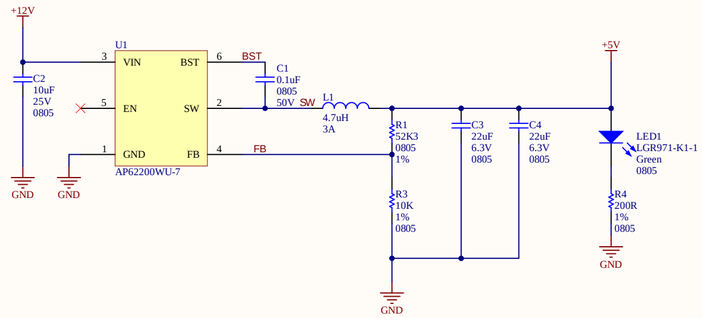

DC MOTOR DRIVER CIRCUIT

Current regulation based on 25% current ripple with fast decay using external Vref

Vref = Imax x Av x Rsense
Av = 10V/V, Imax = 1A, Rsense = 0R1
Power dissipated by driver 1/2 WATT

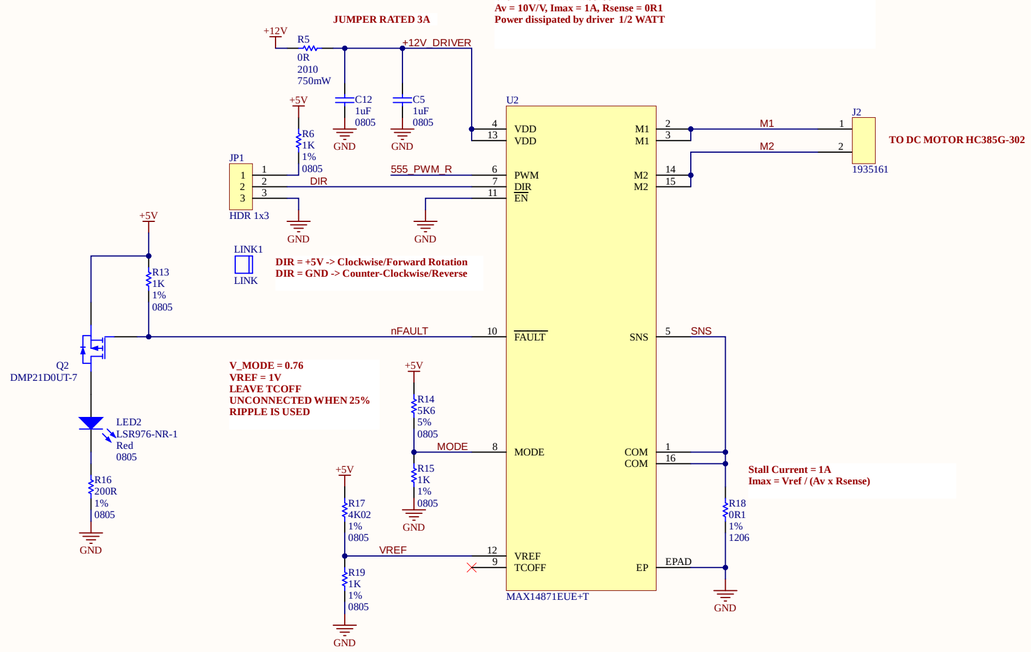

PWM GENERATOR

555 Based 28KHz PWM Generator

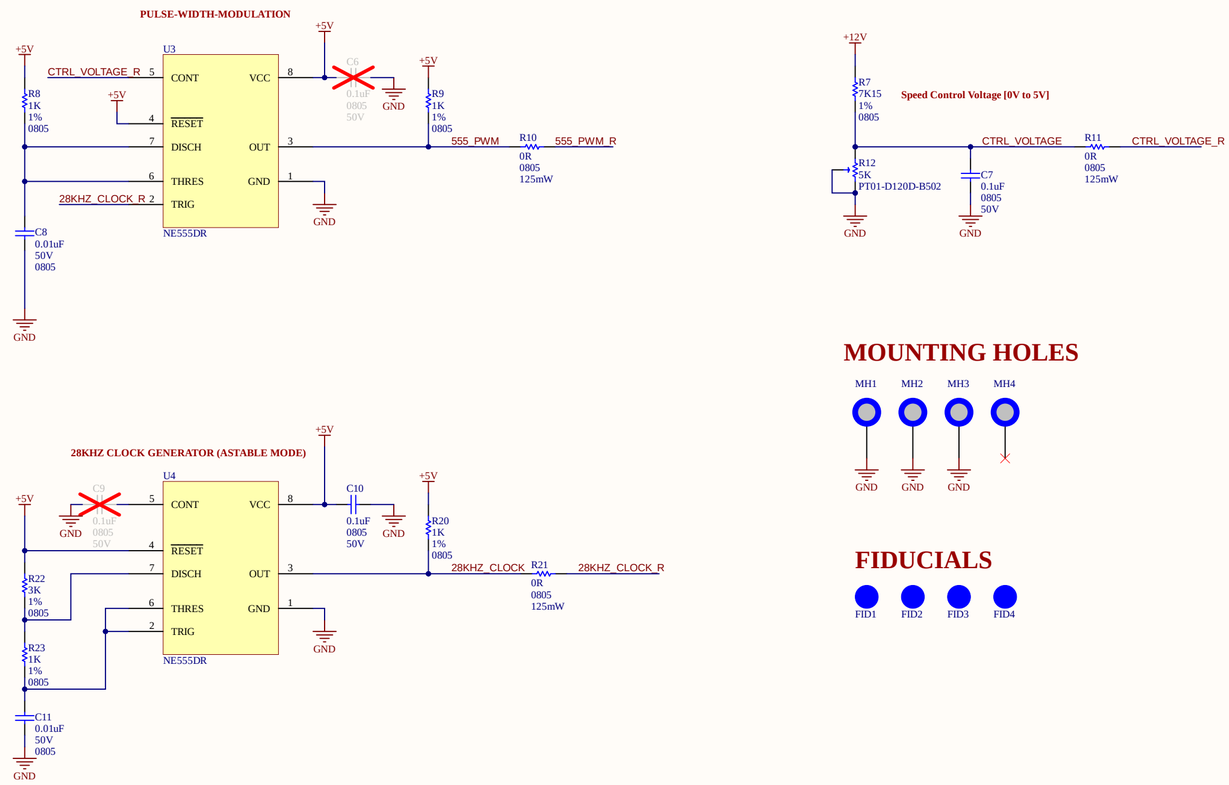

MOUNTING HOLES

FIDUCIALS

Title: MAX 14871 12V DC MOTOR DRIVER		
Size: A2	Number: 001	Revision: 01
Date: 12-28-2022		Sheet 1 of 1
File: C:\Users\..\14871_Schematic.SchDoc		Drawn By: Steven Gilbert