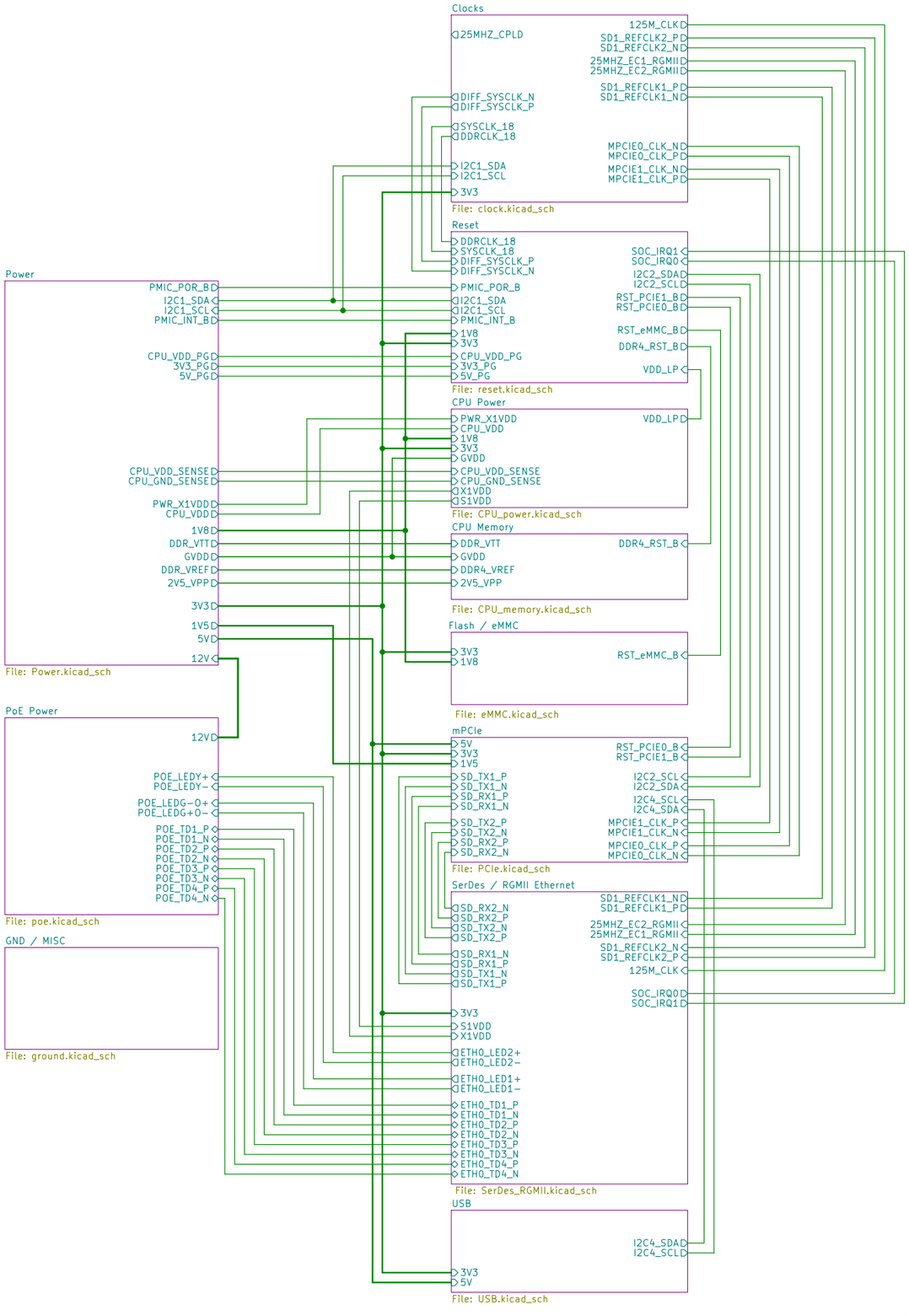

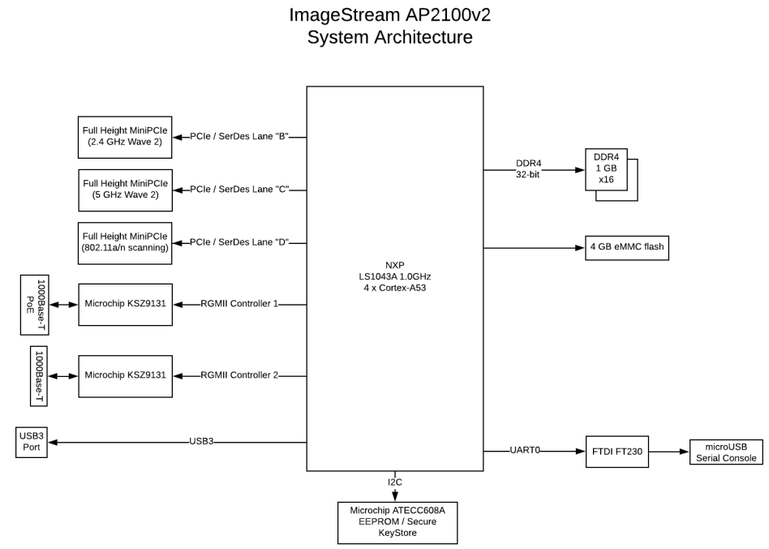

ISis ImageStream Internet Solutions, Inc.		
Sheet: /		
File: AP2100.kicad_sch		
Title: AP2100		
Size: A3	Date: 2020-09-30	**Rev: 1**
KiCad E.D.A. kicad 5.99.0-unknown-85444aadd104ubuntu20.04.1		Id: 1/12

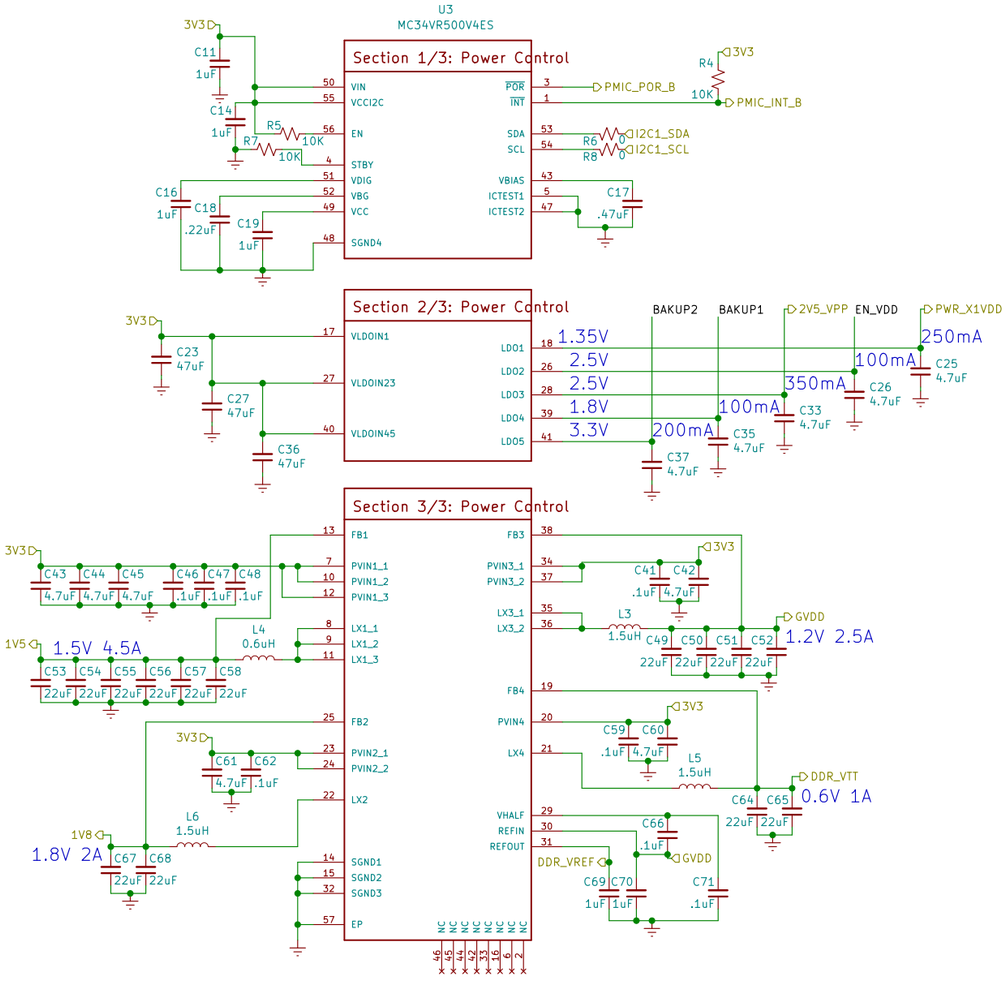

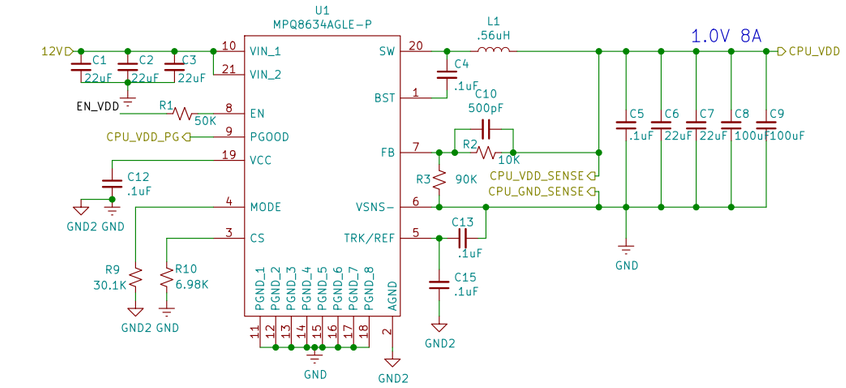

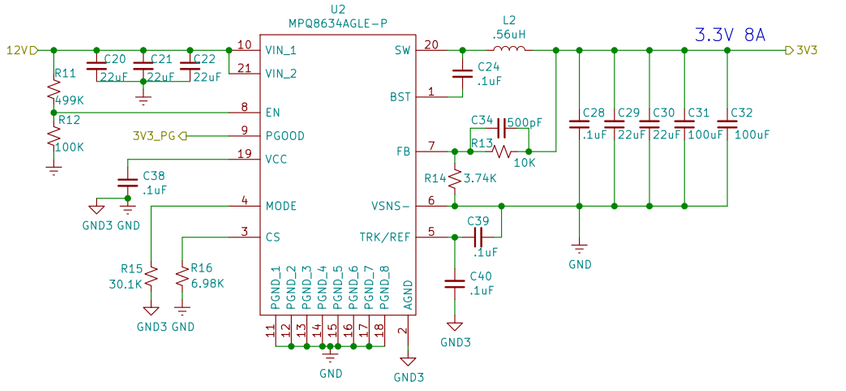

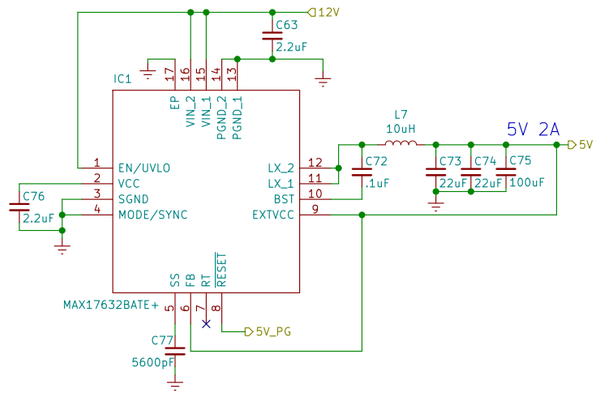

Sheet: /Power/ File: Power.kicad_sch		
Title:		
Size: A3	Date:	**Rev:**
KiCad E.D.A. kicad 5.99.0-unknown-85444aadd104ubuntu20.04.1		Id: 2/12

J1
0826-1X1T-GH-F
POE_TD1_P
POE_TD1_N
POE_TD2_P
POE_TD2_N
POE_TD3_P
POE_TD3_N
POE_TD4_P
POE_TD4_N
TRD1+
TRD1-
TRD2+
TRD2-
TRD3+
TRD3-
TRD4+
TRD4-
TRCT1
TRCT2
TRCT3
TRCT4
VC1
VC2
VC3
VC4
LEDY+
LEDY-
LEDG-_O+
LEDG+_O-
SHIELD
POE_LEDY+
POE_LEDY-
POE_LEDG-O+
POE_LEDG+O-
C81 .1uF
C82 .1uF
C86 .1uF
C88 .1uF
R21 0
Chassis
GNDPWR
Note: DC IN 12V-57V
J2
Barrel_Jack
D11
STPS4S200S
VDC
D10 AUX
R25 100K
R26 4.7K
R27 10K
C90 1nF
C78 1nF
C79 33nF
C80 33nF
C83 1nF
C84 33nF
C85 33nF
D1 SM15T68CA
D2 SM15T68CA
D3 SM15T68CA
D4 SM15T68CA
D5 SM15T68CA
D6 SM15T68CA
FB1 220 OHM
FB2 220 OHM
FB3 220 OHM
FB4 220 OHM
D7 T2
D8 T1
D9 T0
R20 3.9K
R22 3.9K
R23 3.9K
IC2
PM8805TR
VB
STBY
CLS1
CLS2
AGND
T0
T1
T2
FAUX
RAUX
IN12_1
GND12_1
GND12_2
IN12_2
IN12_3
VOB_1
VOB_2
IN36_1
IN36_2
GND36_1
GND36_2
IN36_3
CTRL
PGD
IN78_1
VOUT_1
VOUT_2
VOB_3
VDD
DET
VCP
IN45_1
GND45_1
GND45_2
IN45_2
IN45_3
VOB_4
VOB_5
IN78_2
IN78_3
GND78_1
GND78_2
EP1
EP2
EP3
EP4
EP5
EP6
NC
C87 10nF
R17 76.5
R18 150
R24 10K
R19 26.1K
C104 10nF
C89 10nF
D12 BAV70
C105 10nF
D14 SMAJ58A
NOTE: Class 6 PD device 50W
C91 EEEFK2A330P
C95 4.7uF
C96 100nF
C93 2.2nF
C103 2.2nF
C97 1nF
C98 1nF
D13 SMAJ58A
C99 4.7uF
C92 EEEFK2A330P
L8 5.6uH
C100 4.7uF
C101 4.7uF
C102 4.7uF
C94 2200pF
GND
TR1
POE72PR-12ED
D15 BAS16J
D16 BAS16J
1mH
C106 2.2uF 25V
C107 100nF
R28 10K
PGD
C108 1nF
IC3
PM8804TR
R35 91K
R37 330K
C118 10nF
FSW
DT
SS
AGND
GAT1
PGND
GAT2
VC
EP
BLK
CTL
CS
MODE
NC_1
NC_2
VIN
GNDA
C119 100nF
R43 0
D18 BAS16J
R36 10
R38 10K
C121 100nF
R41 0R05
R42 R100
D23 BAS70
R44 10K
R50 2K
R52 130K
C124 100pF
Q1
BSC190N15NS3GATMA1
Q4
FDMC86259P
C120 47nF
Q5
FOD817AS
R51 390
C126 100nF
C115 100pF
D20 BAS16J
R32 1K
R33 22
Q3
PBSS4240T
D22 BZX84C10
R40 10K
U5
STL90N6F7
C109 100pF
D19 BAS16J
R30 1K
R31 22
Q2
PBSS4240T
D21 BZX84C10
R39 10K
U4
STL90N6F7
L10 10uH
4A
12V
C110 1nF
R34 18
C111 47uF
C112 47uF
C113 EEEFK1C101P
C116 EEEFK1C101P
C117 EEEFK1C101P
C114 100nF
R29 10K
D17 12V
R45 0
R46 0
C122 100nF
R47 20K
R48 2K
C123 220pF
D24 BAS70
R49 47K
D25 BAS70
C125 22nF
R53 4.7K
C127 2.2uF 25V
U6
TS2431-AILT
R54 5.23K

IS ImageStream Internet Solutions, Inc.
Sheet: /PoE Power/
File: poe.kicad_sch
Title: AP2100
Size: A3 | Date: | Rev:
KiCad E.D.A. kicad 5.99.0-unknown-85444aadd104ubuntu20.04.1 | Id: 3/12

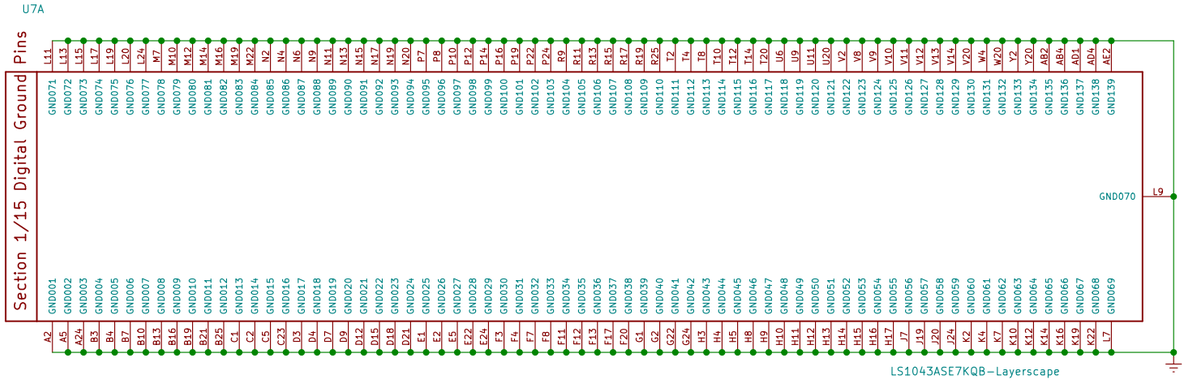

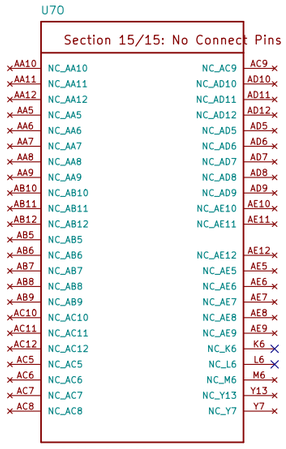

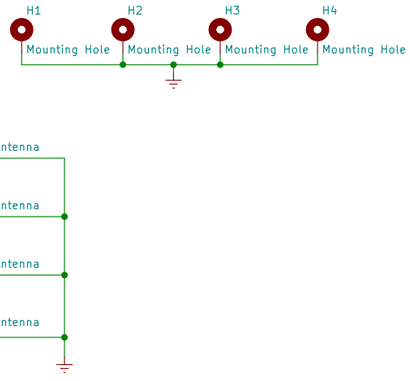

Sheet: /GND / MISC/
File: ground.kicad_sch

Title:

Size: A3	Date:	**Rev:**
KiCad E.D.A. kicad 5.99.0-unknown-85444aadd104ubuntu20.04.1		Id: 4/12

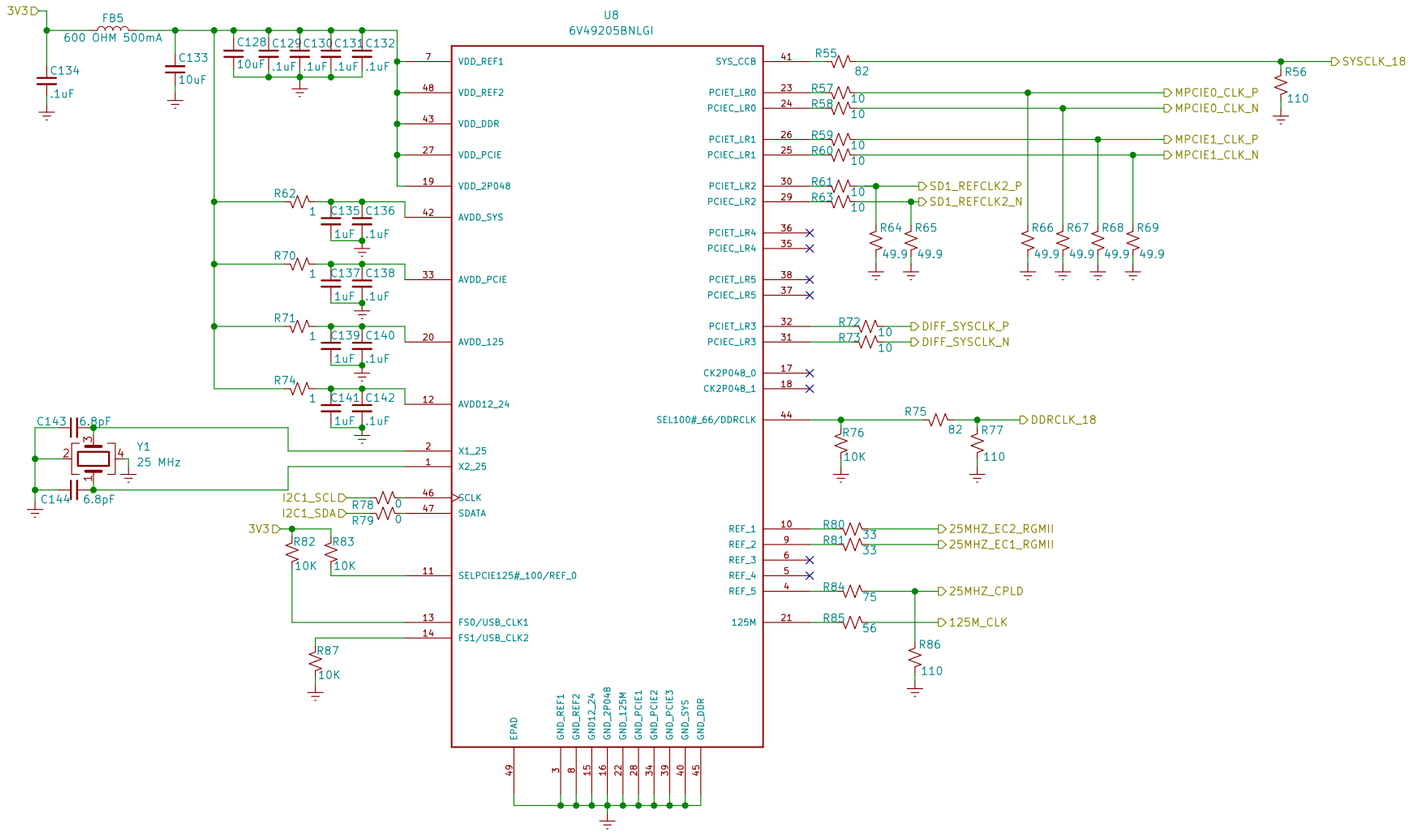

SERDES 10G Clock

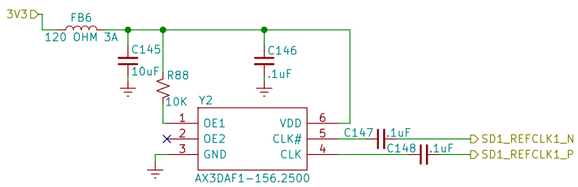

Sheet: /Clocks/		
File: clock.kicad_sch		
Title:		
Size: A3	Date:	**Rev:**
KiCad E.D.A. kicad 5.99.0-unknown-85444aadd104ubuntu20.04.1		Id: 5/12

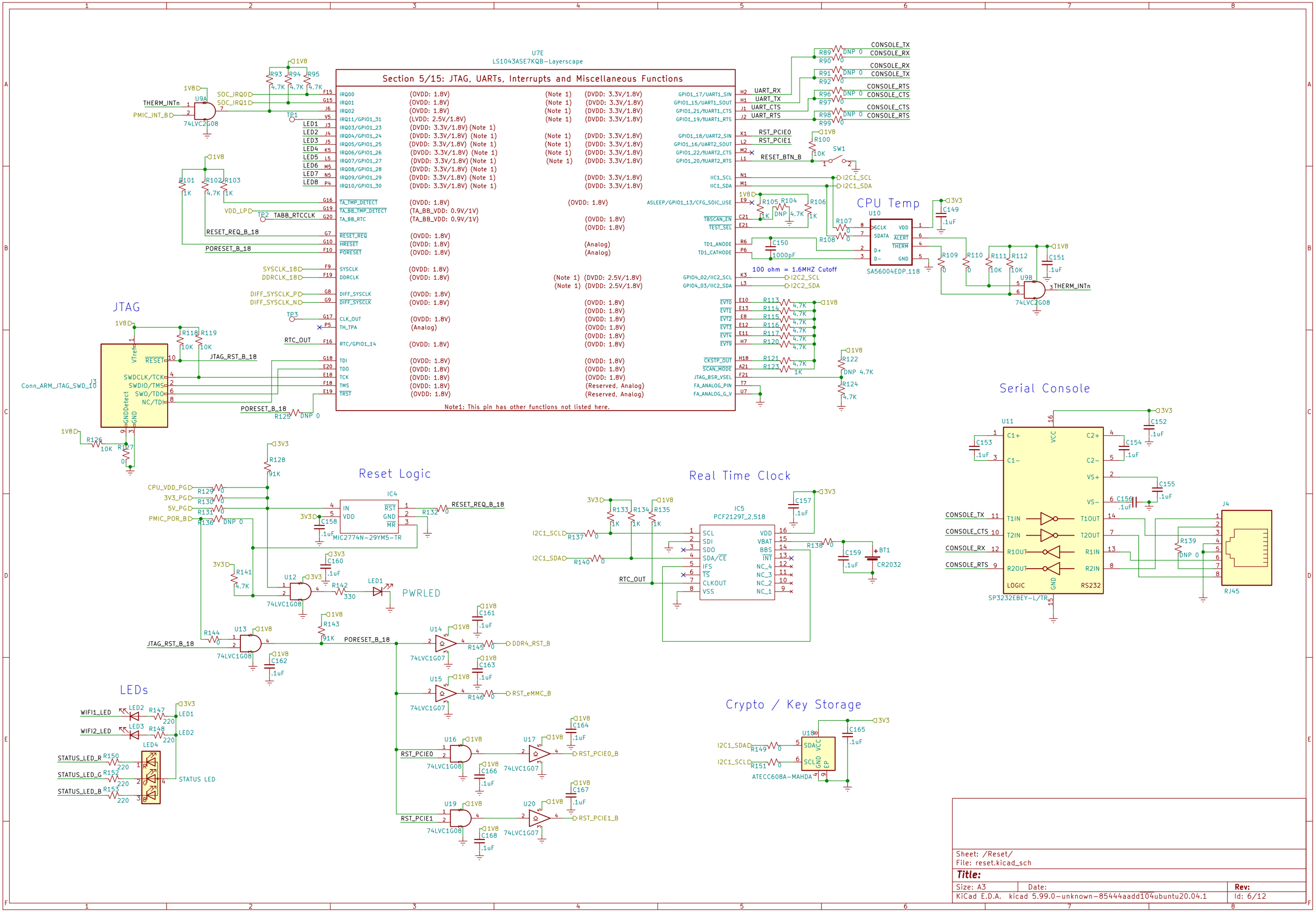

U7E
LS1043ASE7KQB-Layerscape
Section 5/15: JTAG, UARTs, Interrupts and Miscellaneous Functions
Note1: This pin has other functions not listed here.
JTAG
Conn_ARM_JTAG_SWD_10
CPU Temp
SA56004EDP,118
100 ohm = 1.6MHZ Cutoff
Serial Console
SP3232EBEY-L/TR
RJ45
Reset Logic
MIC2774N-29YM5-TR
PWRLED
Real Time Clock
PCF2129T_2,518
LEDs
Crypto / Key Storage
ATECC608A-MAHDA
Sheet: /Reset/
File: reset.kicad_sch
Title:
Size: A3
Date:
Rev:
KiCad E.D.A. kicad 5.99.0-unknown-85444aadd104ubuntu20.04.1
Id: 6/12

U7D
LS1043ASE7KQB-Layerscape

Section 4/15: Power Pins

GVDD
G1VDD01 J18
G1VDD02 K18
G1VDD03 K20
G1VDD04 L18
G1VDD05 M18
G1VDD06 M20
G1VDD07 N18
G1VDD08 P18
G1VDD09 P20
G1VDD10 R21
G1VDD11 R23
G1VDD12 T22
G1VDD13 T24
G1VDD14 V22
G1VDD15 V24
G1VDD16 Y22
G1VDD17 Y24
G1VDD18 AA20
G1VDD19 AB22
G1VDD20 AB24
G1VDD21 AD22
G1VDD22 AD25
G1VDD23 AE24

GVDD: C169 470uF; C170 C171 C172 C173 C174 C175 C176 C177 22uF
GVDD: C186 C187 C188 C189 C190 C191 C192 C193 C194 C195 C196 C197 .1uF
C198 C199 C200 C201 C202 C203 C204 C205 C206 C207 C208 .1uF

OVDD1 J12
OVDD2 J13
OVDD3 J14
OVDD4 J15
OVDD5 J16
OVDD6 J17
OVDD7 N7
TH_VDD T6
PROG_MTR G14
TA_PROG_SEP F14
DVDD1 K8
DVVD2 L8
EVDD M8
LVDD3 U14
LVDD2 U13
LVDD1 U12

1V8: C178 C179 C180 C181 C182 C183 C184 C185 .1uF 1uF .1uF 1uF .1uF 1uF 22uF 22uF
1V8: C209 C210 .1uF 22uF
R154 330 C211 .1uF; JP1; JP2; C212 .1uF C213 10uF; R155 330; R156 330 C214 .1uF
3V3: C215 C216 C217 .1uF .1uF 22uF
EVDD: FB7 120 OHM 3A; C218 C219 .1uF 22uF
1V8: C236 C237 C238 C239 .1uF .1uF .1uF .1uF; C240 1500pF 22uF; FB8 120 OHM 3A

U7C
LS1043ASE7KQB-Layerscape

Section 3/15 Power Pins

CPU_VDD
(1V/0.9V)
VDD01 K13
VDD02 K15
VDD03 K17
VDD04 L10
VDD05 L12
VDD06 L14
VDD07 L16
VDD08 M9
VDD09 M11
VDD10 M13
VDD11 M15
VDD12 M17
VDD13 N8
VDD14 N10
VDD15 N12
VDD16 N14

CPU_VDD: C227 470uF; C228 C229 C230 C231 C232 C233 C234 C235 22uF
CPU_VDD: C248 C249 C250 C251 C252 C253 C254 C255 .1uF 1500pF
CPU_VDD: C270 C271 C272 C273 C274 C275 C276 C277 .1uF 1500pF

CPU_VDD
(1V/0.9V)
VDD33 U10
VDD32 U8
VDD31 T13
VDD30 T11
VDD29 T9
VDD28 R18
VDD27 R16
VDD26 R14
VDD25 R12
VDD24 R10
VDD23 R8
VDD22 P17
VDD21 P15
VDD20 P13
VDD19 P11
VDD17 N16
VDD18 P9

CPU_VDD: C220 C221 C222 1500pF; C223 C224 C225 C226 .1uF
CPU_VDD: C241 C242 C243 1500pF; C244 C245 C246 C247 .1uF
CPU_VDD: C256 C257 C258 C259 C260 C261 C262 C263 C264 C265 C266 C267 C268 C269 1500pF .1uF

JP3: 1 2 CPU_VDD
R157 330 C278 C279 .1uF

S1VDD
S1VDD1 T15
S1VDD2 T16
S1VDD3 T17
S1VDD4 T18
S1VDD5 W14

FB9 120 OHM 3A; FB11 120 OHM 3A; C280 C281 2.2uF; C282 C283 3000pF; C284 C285 C286 C287 C288 1500pF .1uF
FB13 120 OHM 3A; FB14 120 OHM 3A; C298 C299 2.2uF; C300 C301 3000pF .1uF
FB15 120 OHM 3A; FB16 120 OHM 3A; C305 C306 2.2uF; C307 C308 3000pF .1uF

USB_SVDD1 J10
USB_SVDD2 J11
USB_SDVDD1 K9
USB_SDVDD2 K11
TA_BB_VDD H20

JP4: 1 2 VDD_LP
C315 22uF C316 .1uF; R160 330

(Pull-down/1V/0.9V)
FA_VL R7

X1VDD
(1.35V)
X1VDD1 W15
X1VDD2 W16
X1VDD3 W17
X1VDD4 W18
X1VDD5 Y19

X1VDD: C289 .1uF C295 .1uF; C290 C291 .1uF C296 .1uF; C292 C293 1500pF 3000pF; C294 2.2uF C302 2.2uF; C303 22uF C304 22uF
FB10 120 OHM 3A; FB12 120 OHM 3A; PWR_X1VDD
X1VDD: C309 3000pF C310 4.7uF C311 .47uF; R158 0R33; C312 3000pF C313 4.7uF C314 .47uF; R159 0R33

AVDD_SD1_PLL1 W12
AVDD_SD1_PLL2 V19

(1.8V)
AVDD_CGA1 G12
AVDD_CGA2 G11
AVDD_PLAT G13
AVDD_D1 T19

1V8: R161 5.1 C321 10uF C322 1uF
1V8: R162 5.1 C323 10uF C324 1uF
1V8: R163 5.1 C327 10uF C328 1uF
1V8: R166 5.1 C329 10uF C330 1uF

(3.3V)
USB_HVDD2 J9
USB_HVDD1 J8

3V3: C317 C318 .1uF .1uF; C319 C320 3000pF 2.2uF; FB17 120 OHM 3A; FB18 120 OHM 3A

(2.5V/1.8V/1.2V)
TVDD V6

1V8: C325 .1uF C326 22uF; FB19 120 OHM 3A

(Power Sense Pins)
SENSEVDD V7
SENSEGND V7

CPU_GND_SENSE: R164 10
CPU_VDD_SENSE: R165 10

Sheet: /CPU Power/		
File: CPU_power.kicad_sch		
Title:		
Size: A3	Date:	**Rev:**
KiCad E.D.A. kicad 5.99.0-unknown-85444aadd104ubuntu20.04.1		Id: 7/12

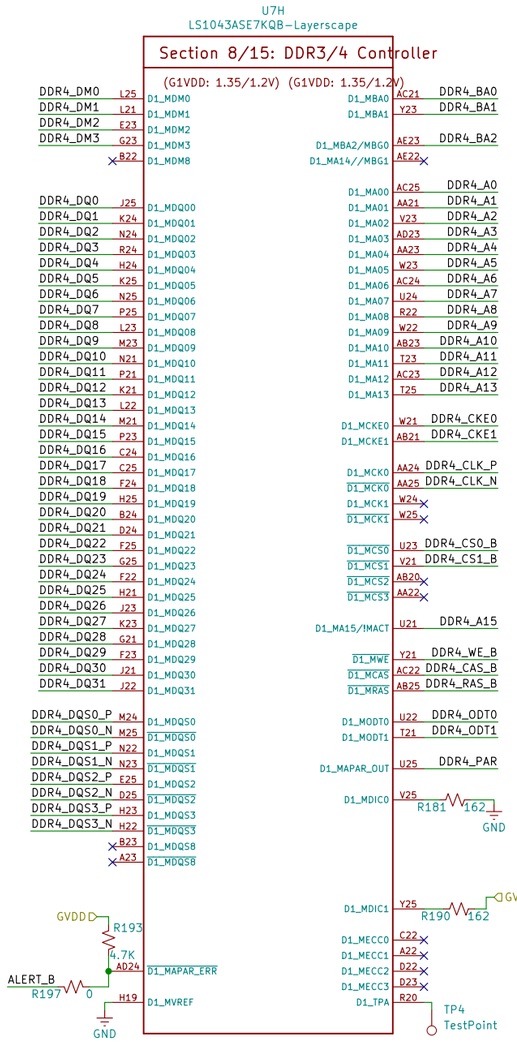

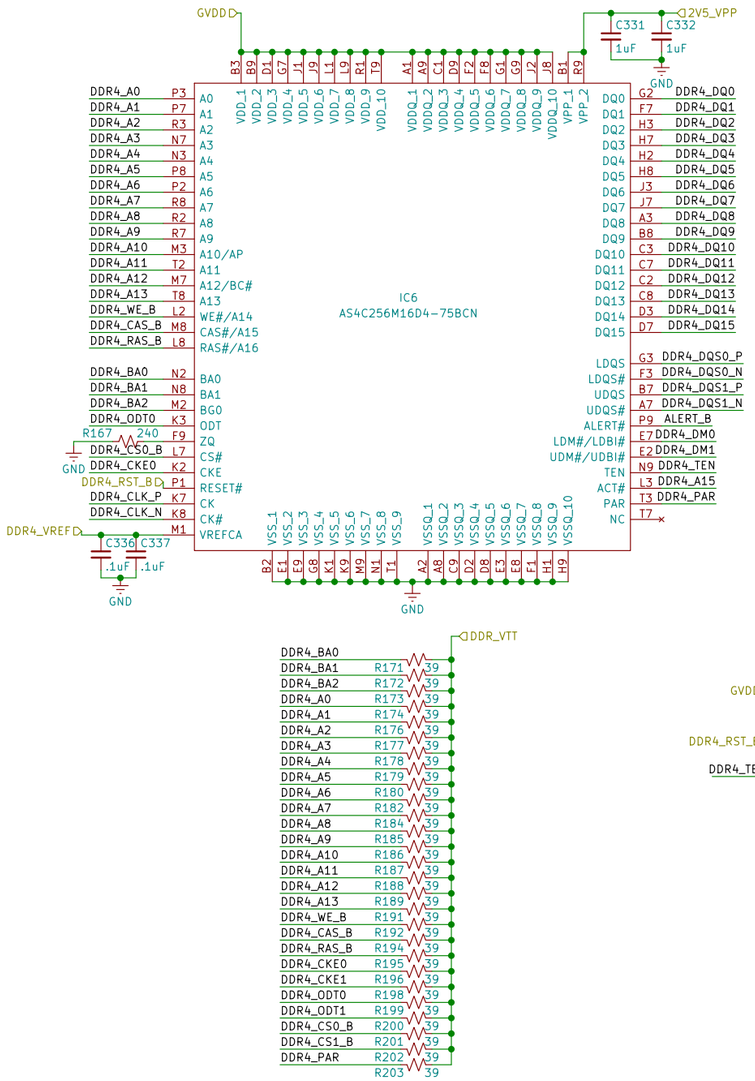

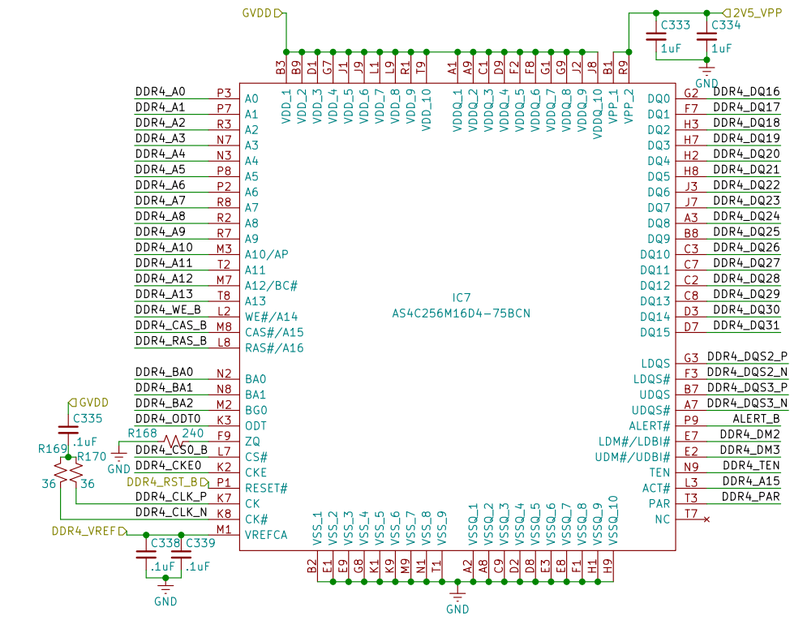

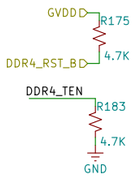

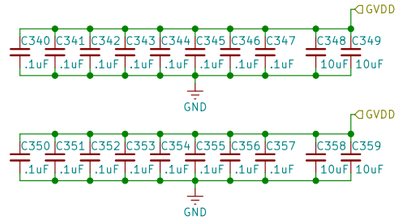

IS ImageStream Internet Solutions, Inc.

Sheet: /CPU Memory/

File: CPU_memory.kicad_sch

Title: AP2100

Size: A3	Date:	Rev:
KiCad E.D.A. kicad 5.99.0-unknown-85444aadd104ubuntu20.04.1		Id: 8/12

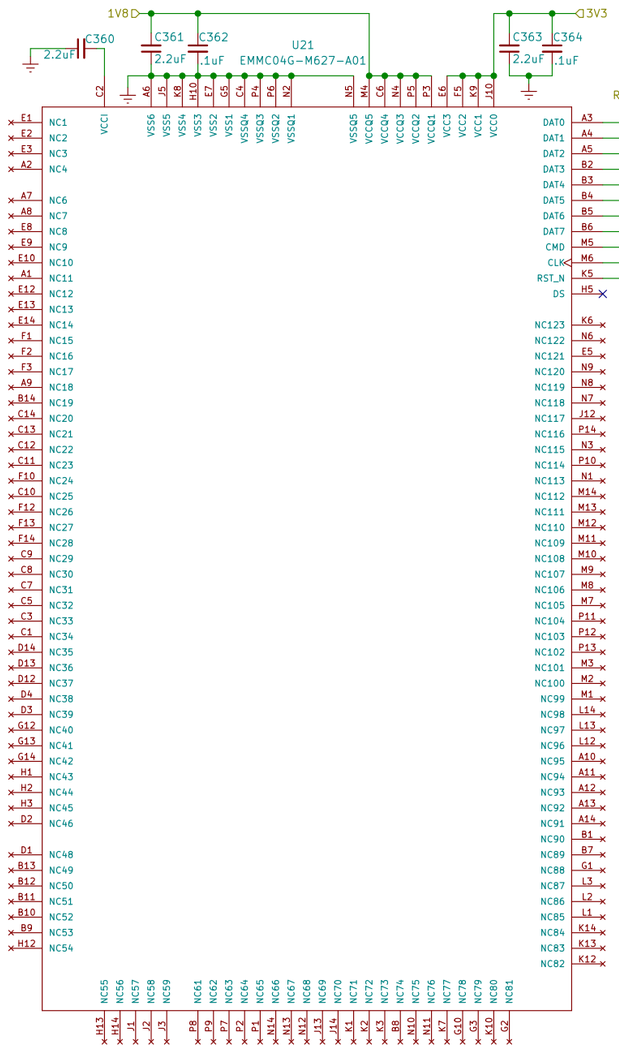

Sheet: /Flash / eMMC/	
File: eMMC.kicad_sch	
Title:	
Size: A3	Date:
KiCad E.D.A. kicad 5.99.0-unknown-85444aadd104ubuntu20.04.1	**Rev:** Id: 9/12

Mini PCI Express

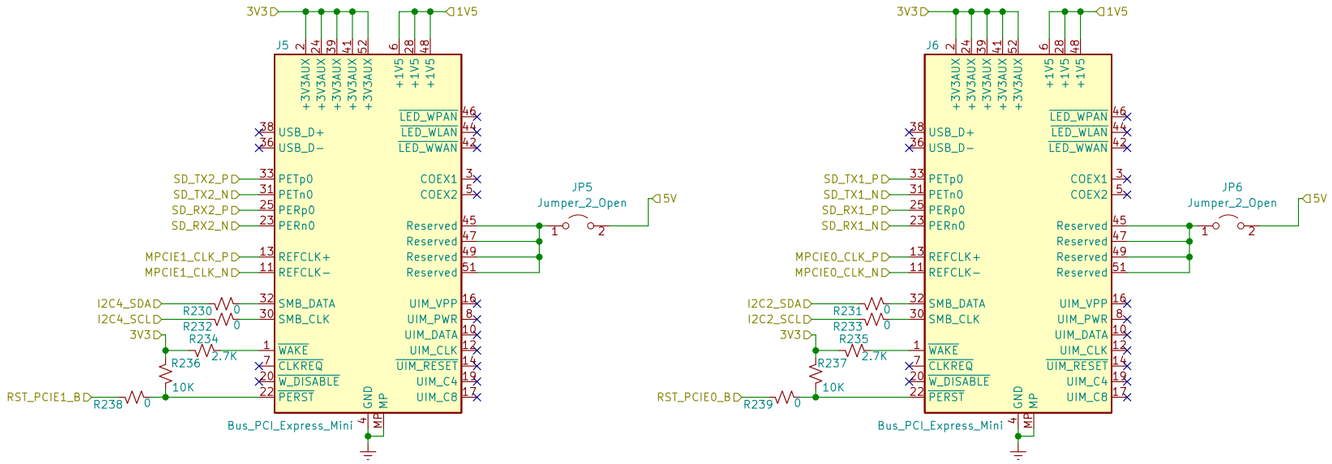

IS ImageStream Internet Solutions, Inc.

Sheet: /mPCIe/
File: PCIe.kicad_sch

Title: AP2100

Size: A3	Date:	Rev:
KiCad E.D.A. kicad 5.99.0−unknown−85444aadd104ubuntu20.04.1		Id: 10/12

Ethernet 0 (PoE In)

U7L

Section 12/15: Ethernet Controller 1

(LVDD: 2.5V/1.8V)

EC1_RXD0 W2
EC1_RXD1 W1
EC1_RXD2 V1
EC1_RXD3 U2
EC1_RX_DV Y1
EC1_RX_CLK U1
EC1_TXD0 Y3
EC1_TXD1 W3
EC1_TXD2 V4
EC1_TXD3 V3
EC1_TX_EN Y4
EC1_GTX_CLK U4
EMI1_MDIO W5
EMI1_MDC Y5
EC1_GTX_CLK125 AA3 → 125M_CLK

Note1: All pin have other functions not listed here.

LS1043ASE7KQB–Layerscape

3V3 → NTA4151P Q6 → R240 0 → 3V3

IC8 KSZ9131RNXC

AVDDL_1 4, AVDDL_2 9, AVDDL_PLL 44, DVDDL_1 18, DVDDL_2 23, DVDDL_3 26, DVDDL_4 30, DVDDL_5 39, LDO_O 43, AVDDH_1 1, AVDDH_2 12, DVDDH_1 16, DVDDH_2 34, DVDDH_3 40

RXD0/MODE0 32 P0_RXD0 (R241 22)
RXD1/MODE1 31 P0_RXD1 (R242 22)
RXD2/MODE2 28 P0_RXD2 (R243 22)
RXD3/MODE3 27 P0_RXD3 (R244 22)
TXD0 19
TXD1 20
TXD2 21
TXD3 22
RX_CTL/CLK125_EN 33 P0_RX_CTL/CLK125_EN (R245 22)
TX_CTL 25
MDIO 37
MDC 36
INT_N/PME_N2/ALLPHYAD 38 SOC_IRQ0 (R249 22) (R248 3V3 1K)
RXC/PHYAD2 35
TXC 24
XO 45
XI 46 ← 25MHZ_EC1_RGMII
NC_1 13, NC_2 14, NC_3 47
VSS 29, P_VSS 49, ISET 48 → R260 6.04K

TXRXP_A 2 → ETH0_TD1_P
TXRXM_A 3 → ETH0_TD1_N
TXRXP_B 5 → ETH0_TD2_P
TXRXM_B 6 → ETH0_TD2_N
TXRXP_C 7 → ETH0_TD3_P
TXRXM_C 8 → ETH0_TD3_N
TXRXP_D 10 → ETH0_TD4_P
TXRXM_D 11 → ETH0_TD4_N

LED1/PME_N1//PHYAD0 17 P0_LED1 → 3V3 ETH0_LED1+ ETH0_LED1– (R246 220)
LED2/PHYAD1 15 P0_LED2 → 3V3 ETH0_LED2+ ETH0_LED2– (R247 220)

NOTE: LED Mode is Individual
CLK125_NDO/LED_MODE 41 R250 10K → 3V3
RESET_N 42 R251 100K

NOTE: 125MHz Output Clock is Disabled
P0_RX_CTL/CLK125_EN → R252 1K

NOTE: Mode is 1110 = 10/100 F/H, 1000BT Full (RGMII)
P0_RXD3 R253 10K, P0_RXD2 R254 10K, P0_RXD1 R255 10K, P0_RXD0 R256 DNP 10K
R261 DNP 1K, R262 DNP 1K, R263 DNP 1K, R264 1K

NOTE: PHY Address is 01h
P0_RX_CLK R257 DNP 10K, P0_LED2 R258 DNP 10K, P0_LED1 R259 10K
R265 1K, R266 1K, R267 DNP 1K

Mode [3:0] Description
1000 10/100 Full and Half, 1000BT Full (RGMII), PME Enable on LED1
1010 10/100 Full and Half, 1000BT Full (RGMII), PME Enable on INT_N
1100 1000BT Full (RGMII)
1110 10/100 Full and Half, 1000BT Full (RGMII)

U7B

Section 2/15 SerDes Ground Pins

SD_GND01 U15, SD_GND02 U16, SD_GND03 U17, SD_GND04 U18, SD_GND05 U19, SD_GND06 W8, SD_GND07 W11, SD_GND08 Y8, SD_GND09 Y9, SD_GND10 Y10, SD_GND11 Y11, SD_GND12 Y12, SD_GND13 Y14, SD_GND14 Y15, SD_GND15 Y16, SD_GND16 Y17, SD_GND17 Y18, SD_GND18 AA13, SD_GND19 AA16
SD_GND20 AA19
SD_GND21 AB13, SD_GND22 AB16, SD_GND23 AB19, SD_GND24 AC13, SD_GND25 AC14, SD_GND26 AC15, SD_GND27 AC16, SD_GND28 AC17, SD_GND29 AC18, SD_GND30 AC19, SD_GND31 AC20, SD_GND32 AD13, SD_GND33 AD16, SD_GND34 AD19, SD_GND35 AD21, SD_GND36 AE13, SD_GND37 AE16, SD_GND38 AE19, SD_GND39 AE21

LS1043ASE7KQB–Layerscape

U7N

Section 14/15: SerDes

SD1_TX0_P AA14, SD1_TX0_N AB14
SD1_RX0_P AE14, SD1_RX0_N AD14
SD1_TX1_P AA15 → SD_TX1_P, SD1_TX1_N AB15 → SD_TX1_N
SD1_RX1_P AE15 → SD_RX1_P, SD1_RX1_N AD15 → SD_RX1_N
SD1_REFCLK1_P W10, SD1_REFCLK1_N W9
SD1_REFCLK2_P AE20, SD1_REFCLK2_N AD20
SD1_TX2_P AA17 → SD_TX2_P, SD1_TX2_N AB17 → SD_TX2_N
SD1_RX2_P AE17 → SD_RX2_P, SD1_RX2_N AD17 → SD_RX2_N
SD1_PLL1_TPA V16, SD1_PLL1_TPD V15
SD1_PLL2_TPA V18, SD1_PLL2_TPD V17
SD1_TX3_P AA18, SD1_TX3_N AB18
SD1_IMP_CAL_TX W19 (R269 X1VDD 200), SD1_IMP_CAL_RX W13 (R270 S1VDD 698)
SD1_RX3_P AE18, SD1_RX3_N AD18

LS1043ASE7KQB–Layerscape

Ethernet 1

U7M

Section 13/15: Ethernet Controller 2

(LVDD: 2.5V/1.8V)

EC2_RXD0 AC2
EC2_RXD1 AC1
EC2_RXD2 AB1
EC2_RXD3 AA2
EC2_RX_DV AD2
EC2_RX_CLK AA1
EC2_TXD0 AD3
EC2_TXD1 AC4
EC2_TXD2 AC3
EC2_TXD3 AB3
EC2_TX_EN AE3
EC2_GTX_CLK AA4
TVDD: 1.2V
EMI2_MDIO W6
EMI2_MDC Y6
(LVDD: 2.5V/1.8V)
EC2_GTX_CLK125 AE4 → 125M_CLK

Note1: All pin have other functions not listed here.

LS1043ASE7KQB–Layerscape

3V3 → NTA4151P Q7 → R268 0 → 3V3

IC9 KSZ9131RNXC

AVDDL_1 4, AVDDL_2 9, AVDDL_PLL 44, DVDDL_1 18, DVDDL_2 23, DVDDL_3 26, DVDDL_4 30, DVDDL_5 39, LDO_O 43, AVDDH_1 1, AVDDH_2 12, DVDDH_1 16, DVDDH_2 34, DVDDH_3 40

RXD0/MODE0 32 P1_RXD0 (R271 22)
RXD1/MODE1 31 P1_RXD1 (R272 22)
RXD2/MODE2 28 P1_RXD2 (R273 22)
RXD3/MODE3 27 P1_RXD3 (R274 22)
TXD0 19
TXD1 20
TXD2 21
TXD3 22
RX_CTL/CLK125_EN 33 P1_RX_CTL/CLK125_EN (R275 22)
TX_CTL 25
MDIO 37
MDC 36
INT_N/PME_N2/ALLPHYAD 38 SOC_IRQ1 (R279 22) (R278 3V3 1K)
RXC/PHYAD2 35
TXC 24
XO 45
XI 46 ← 25MHZ_EC2_RGMII
NC_1 13, NC_2 14, NC_3 47
VSS 29, P_VSS 49, ISET 48 → R283 6.04K

TXRXP_A 2 → J7 TRD1+ 11
TXRXM_A 3 → J7 TRD1– 10
TXRXP_B 5 → J7 TRD2+ 4
TXRXM_B 6 → J7 TRD2– 5
TXRXP_C 7 → J7 TRD3+ 3
TXRXM_C 8 → J7 TRD3– 2
TXRXP_D 10 → J7 TRD4+ 8
TXRXM_D 11 → J7 TRD4– 9

C365 1uF 11–10, C366 1uF 4–5, C367 1uF 3–2, C368 1uF 8–9

LED1/PME_N1//PHYAD0 17 P1_LED1 → 3V3 → J7 14 → YELLOW
LED2/PHYAD1 15 P1_LED2 (R276 220, R277 220) → J7 13 → GRN / ORG

J7 L836–1J1T–43
TRD1+ 11, TRCT1 12, TRD1– 10
TRD2+ 4, TRCT2 6, TRD2– 5
TRD3+ 3, TRCT3 1, TRD3– 2
TRD4+ 8, TRCT4 7, TRD4– 9
SHIELD 52

NOTE: LED Mode is Individual
CLK125_NDO/LED_MODE 41 R280 10K → 3V3
RESET_N 42 R281 100K

NOTE: 125MHz Output Clock is Disabled
P1_RX_CTL/CLK125_EN → R282 1K

NOTE: Mode is 1110 = 10/100 F/H, 1000BT Full (RGMII)
P1_RXD3 R284 10K, P1_RXD2 R285 10K, P1_RXD1 R286 10K, P1_RXD0 R287 DNP 10K
R291 DNP 1K, R292 DNP 1K, R293 DNP 1K, R294 1K

NOTE: PHY Address is 02h
P1_RX_CLK R288 DNP 10K, P1_LED2 R289 10K, P1_LED1 R290 DNP 10K
R295 1K, R296 DNP 1K, R297 1K

Mode [3:0] Description
1000 10/100 Full and Half, 1000BT Full (RGMII), PME Enable on LED1
1010 10/100 Full and Half, 1000BT Full (RGMII), PME Enable on INT_N
1100 1000BT Full (RGMII)
1110 10/100 Full and Half, 1000BT Full (RGMII)

IS ImageStream Internet Solutions, Inc.

Sheet: /SerDes / RGMII Ethernet/
File: SerDes_RGMII.kicad_sch

Title: AP2100

Size: A3	Date:	Rev:
KiCad E.D.A. kicad 5.99.0–unknown–85444aadd104ubuntu20.04.1		Id: 11/12

U7I

Section 9/15: USB1

(0V to 5V)
(DVDD: 3.3V/1.8V)
(USB_HVDD: 3.3V)
(USB_HVDD: 3.3V)
(USB_SVDD: 1V/0.9V)
(USB_SVDD: 1V/0.9V)
(USB_SVDD: 1V/0.9V)
(USB_SVDD: 1V/0.9V)
(200 Ohm, 1% to GND)
(DVDD: 3.3V/1.8V)
(Open)

USB1_VBUS
GPIO4_30/USB1_PWRFAULT
USB1_D_P
USB1_D_M
USB1_TX_P
USB1_TX_M
USB1_RX_P
USB1_RX_M
USB1_RESREF
GPIO4_29/USB_DRVVBUS
USB1_ID

E7 G6 F6 E6 F1 F2 E3 E4 G3 H6 F5

LS1043ASE7KQB-Layerscape

USB1_PWR
FL1 NFE31PT222Z1E9L
R298 0
USB13PWR_FLT
FL2 ACM2012-900-2P-T002
USB1_DP
USB1_DM
C370 .1uF
C371 .1uF
USB1_TXDP
USB1_TXDM
USB1_RXDP
USB1_RXDM
USB13_PWREN
R302 1K
R303 200

USB Camera
J8 SS-52000-001
VBUS GND D- SSTX- D+ SSTX+ GND MH1 SSRX- MH2 SSRX+
1 2 3 4 5 6 7 8 9 MH1 MH2

U7J

Section 10/15: USB2

(0V to 5V)
(Note 1) (DVDD: 3.3V/1.8V)
(USB_HVDD: 3.3V)
(USB_HVDD: 3.3V)
(USB_SVDD: 1V/0.9V)
(USB_SVDD: 1V/0.9V)
(USB_SVDD: 1V/0.9V)
(USB_SVDD: 1V/0.9V)
(200 Ohm, 1% to GND)
(Note 1) (DVDD: 3.3V/1.8V)
(Open)

USB2_VBUS
GPIO4_11/USB2_PWRFAULT
USB2_D_P
USB2_D_M
USB2_TX_P
USB2_TX_M
USB2_RX_P
USB2_RX_M
USB2_RESREF
GPIO4_10/USB2_DRWBUS
USB2_ID

C7 M4 D6 C6 D1 D2 C3 C4 G4 L4 D5

Note1: This pin has other functions not listed here.

LS1043ASE7KQB-Layerscape

USB1_PWR
FL3 NFE31PT222Z1E9L
R304 0
USB2PWR_FLT
FL4 ACM2012-900-2P-T002
USB2_DP
USB2_DM
C378 .1uF
C379 .1uF
USB2_TXDP
USB2_TXDM
USB2_RXDP
USB2_RXDM
USB2_PWREN
R305 1K
R306 200

External USB
J9 SS-52000-001
VBUS GND D- SSTX- D+ SSTX+ GND MH1 SSRX- MH2 SSRX+
1 2 3 4 5 6 7 8 9 MH1 MH2

U7K

Section 11/15: USB3

(0V to 5V)
(Note 1) (DVDD: 3.3V/1.8V)
(USB_HVDD: 3.3V)
(USB_HVDD: 3.3V)
(USB_SVDD: 1V/0.9V)
(USB_SVDD: 1V/0.9V)
(USB_SVDD: 1V/0.9V)
(USB_SVDD: 1V/0.9V)
(200 Ohm, 1% to GND)
(Note 1) (DVDD: 3.3V/1.8V)
(Open)

USB3_VBUS
GPIO4_13/USB3_PWRFAULT
USB3_D_P
USB3_D_M
USB3_TX_P
USB3_TX_M
USB3_RX_P
USB3_RX_M
USB3_RESREF
GPIO4_12/USB3_DRWBUS
USB3_ID

A7 N3 B6 A6 B1 B2 A3 A4 G5 M3 B5

I2C4_SDA
I2C4_SCL

LS1043ASE7KQB-Layerscape

USB1_PWR
FL5 NFE31PT222Z1E9L
R307 0
FL6 ACM2012-900-2P-T002
USB3_DP
USB3_DM
C380 .1uF
C381 .1uF
USB3_TXDP
USB3_TXDM
USB3_RXDP
USB3_RXDM
R308 1K
R309 200

WIFI Scanning Radio
J10 SS-52000-001
VBUS GND D- SSTX- D+ SSTX+ GND MH1 SSRX- MH2 SSRX+
1 2 3 4 5 6 7 8 9 MH1 MH2

3V3
C369 .1uF
R299 100K
R300 100K
U22A 74LVC2G04
USB13PWR_FLT
U22B 74LVC2G04
USB2PWR_FLT
5V

IC10 MAX1564ETE+
SEL SETI FLTB FLTC EP_GND ONA ONB ONC FLTA
INC INB VCC INA OUTC OUTB GND OUTA
R301 26.1K
C372 22uF C373 10uF C374 22uF C375 10uF C376 22uF C377 10uF
USB3_PWR
USB2_PWR
USB1_PWR
USB13_PWREN
USB2_PWREN

U23 SP3011
USB1_TXDP USB1_TXDM USB1_RXDP USB1_RXDM
USB1_DP USB1_DM

Note:
Pins 1,2,3,4,5,6,7 are not internally connected.
But should be connected to the
opposite pin with the PCB trace

U24 SP3011
USB2_TXDP USB2_TXDM USB2_RXDP USB2_RXDM
USB2_DP USB2_DM

Note:
Pins 1,2,3,4,5,6,7 are not internally connected.
But should be connected to the
opposite pin with the PCB trace

U25 SP3011
USB3_TXDP USB3_TXDM USB3_RXDP USB3_RXDM
USB3_DP USB3_DM

Note:
Pins 1,2,3,4,5,6,7 are not internally connected.
But should be connected to the
opposite pin with the PCB trace

IS ImageStream Internet Solutions, Inc.
Sheet: /USB/
File: USB.kicad_sch
Title: AP2100
Size: A3 | Date: | **Rev:**
KiCad E.D.A. kicad 5.99.0-unknown-85444aadd104ubuntu20.04.1 | Id: 12/12