DC Jack
File: dc_jack.kicad_sch
Micro USB 2.0
File: micro_usb.kicad_sch
Fan & Debug
File: fan_debug.kicad_sch
SODIMM Connector 1
UART, I2C, Power
File: sodimm1.kicad_sch
Pre-reg 3V3
File: pre-reg3V3.kicad_sch
Microphone
File: microphone.kicad_sch
SODIMM Connector 2
USB2, I2S, GPIO, SPI, CAM
File: sodimm2.kicad_sch
M.2 SSD
File: m2ssd.kicad_sch
CSI
File: csi.kicad_sch
SODIMM Connector 3
USB3, PCIE, DP
File: sodimm3.kicad_sch
M.2 WiFi
File: m2wifi.kicad_sch
IMU
File: imu.kicad_sch
Pre-reg 5V
File: pre-reg5V.kicad_sch
USB C
File: usbC.kicad_sch
1V8 LDO & 3V3 AO Rails
File: ldoAo.kicad_sch
GPIO
File: gpio.kicad_sch
DP
File: dp.kicad_sch
Power MCU
File: power_mcu.kicad_sch

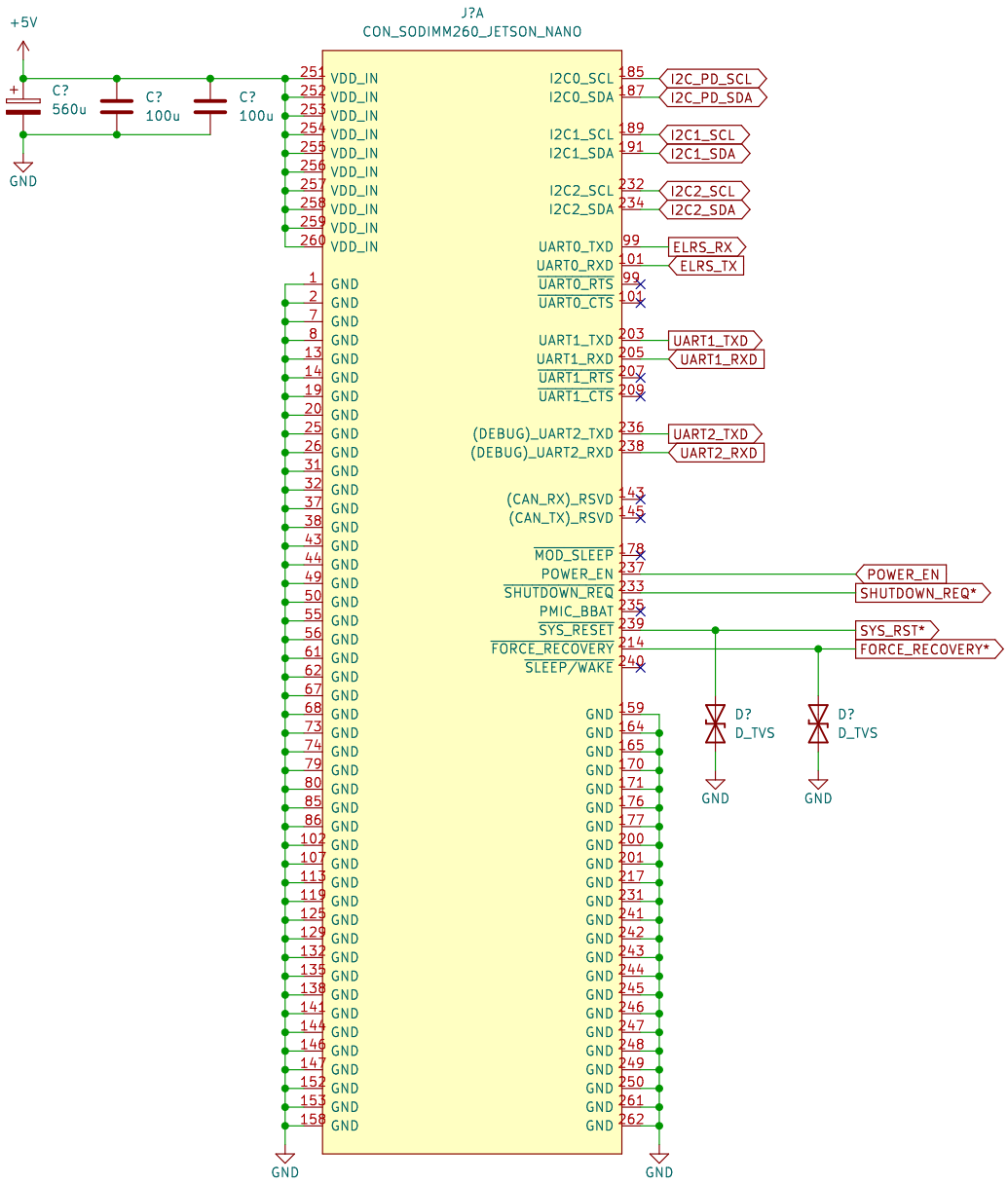
+5V
C?
560u
C?
100u
C?
100u
GND
J?A
CON_SODIMM260_JETSON_NANO
VDD_IN
GND
I2C0_SCL
I2C0_SDA
I2C1_SCL
I2C1_SDA
I2C2_SCL
I2C2_SDA
UART0_TXD
UART0_RXD
UART0_RTS
UART0_CTS
UART1_TXD
UART1_RXD
UART1_RTS
UART1_CTS
(DEBUG)_UART2_TXD
(DEBUG)_UART2_RXD
(CAN_RX)_RSVD
(CAN_TX)_RSVD
MOD_SLEEP
POWER_EN
SHUTDOWN_REQ
PMIC_BBAT
SYS_RESET
FORCE_RECOVERY
SLEEP/WAKE
I2C_PD_SCL
I2C_PD_SDA
I2C1_SCL
I2C1_SDA
I2C2_SCL
I2C2_SDA
ELRS_RX
ELRS_TX
UART1_TXD
UART1_RXD
UART2_TXD
UART2_RXD
POWER_EN
SHUTDOWN_REQ*
SYS_RST*
FORCE_RECOVERY*
D?
D_TVS
D?
D_TVS
GND
GND
GND
GND

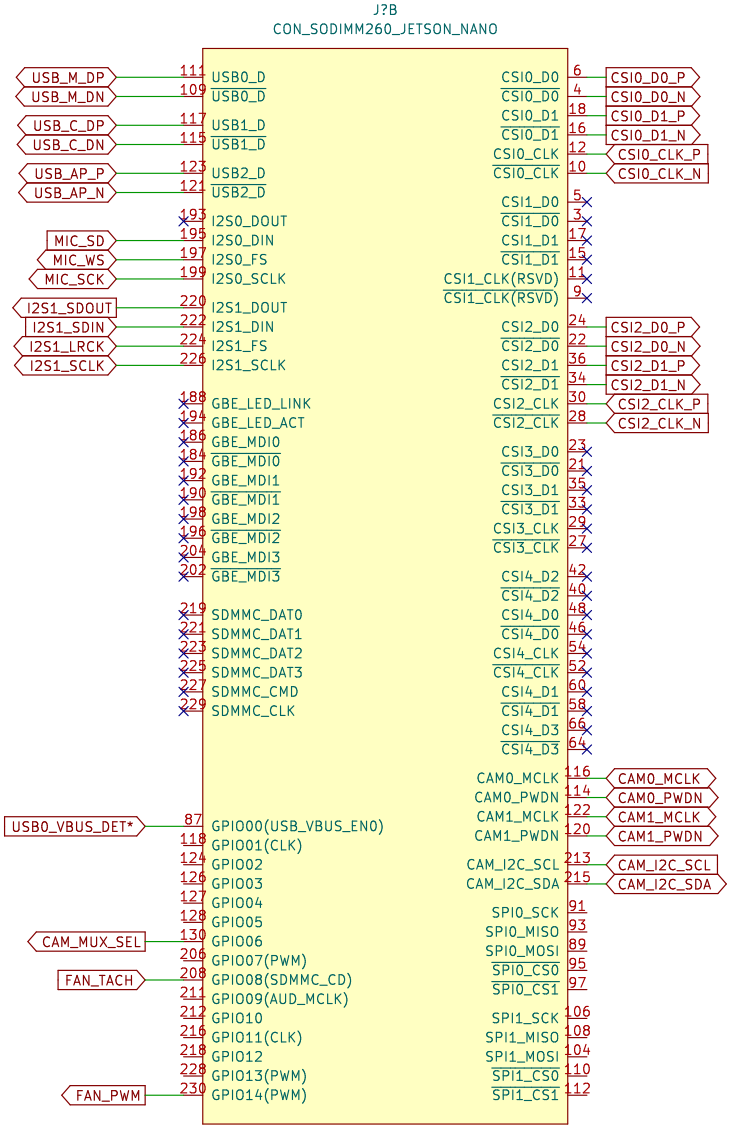
J?B
CON_SODIMM260_JETSON_NANO
USB_M_DP
USB_M_DN
USB_C_DP
USB_C_DN
USB_AP_P
USB_AP_N
MIC_SD
MIC_WS
MIC_SCK
I2S1_SDOUT
I2S1_SDIN
I2S1_LRCK
I2S1_SCLK
USB0_VBUS_DET*
CAM_MUX_SEL
FAN_TACH
FAN_PWM
USB0_D
USB0_D
USB1_D
USB1_D
USB2_D
USB2_D
I2S0_DOUT
I2S0_DIN
I2S0_FS
I2S0_SCLK
I2S1_DOUT
I2S1_DIN
I2S1_FS
I2S1_SCLK
GBE_LED_LINK
GBE_LED_ACT
GBE_MDI0
GBE_MDI0
GBE_MDI1
GBE_MDI1
GBE_MDI2
GBE_MDI2
GBE_MDI3
GBE_MDI3
SDMMC_DAT0
SDMMC_DAT1
SDMMC_DAT2
SDMMC_DAT3
SDMMC_CMD
SDMMC_CLK
GPIO00(USB_VBUS_EN0)
GPIO01(CLK)
GPIO02
GPIO03
GPIO04
GPIO05
GPIO06
GPIO07(PWM)
GPIO08(SDMMC_CD)
GPIO09(AUD_MCLK)
GPIO10
GPIO11(CLK)
GPIO12
GPIO13(PWM)
GPIO14(PWM)
CSI0_D0
CSI0_D0
CSI0_D1
CSI0_D1
CSI0_CLK
CSI0_CLK
CSI1_D0
CSI1_D0
CSI1_D1
CSI1_D1
CSI1_CLK(RSVD)
CSI1_CLK(RSVD)
CSI2_D0
CSI2_D0
CSI2_D1
CSI2_D1
CSI2_CLK
CSI2_CLK
CSI3_D0
CSI3_D0
CSI3_D1
CSI3_D1
CSI3_CLK
CSI3_CLK
CSI4_D2
CSI4_D2
CSI4_D0
CSI4_D0
CSI4_CLK
CSI4_CLK
CSI4_D1
CSI4_D1
CSI4_D3
CSI4_D3
CAM0_MCLK
CAM0_PWDN
CAM1_MCLK
CAM1_PWDN
CAM_I2C_SCL
CAM_I2C_SDA
SPI0_SCK
SPI0_MISO
SPI0_MOSI
SPI0_CS0
SPI0_CS1
SPI1_SCK
SPI1_MISO
SPI1_MOSI
SPI1_CS0
SPI1_CS1
CSI0_D0_P
CSI0_D0_N
CSI0_D1_P
CSI0_D1_N
CSI0_CLK_P
CSI0_CLK_N
CSI2_D0_P
CSI2_D0_N
CSI2_D1_P
CSI2_D1_N
CSI2_CLK_P
CSI2_CLK_N
CAM0_MCLK
CAM0_PWDN
CAM1_MCLK
CAM1_PWDN
CAM_I2C_SCL
CAM_I2C_SDA

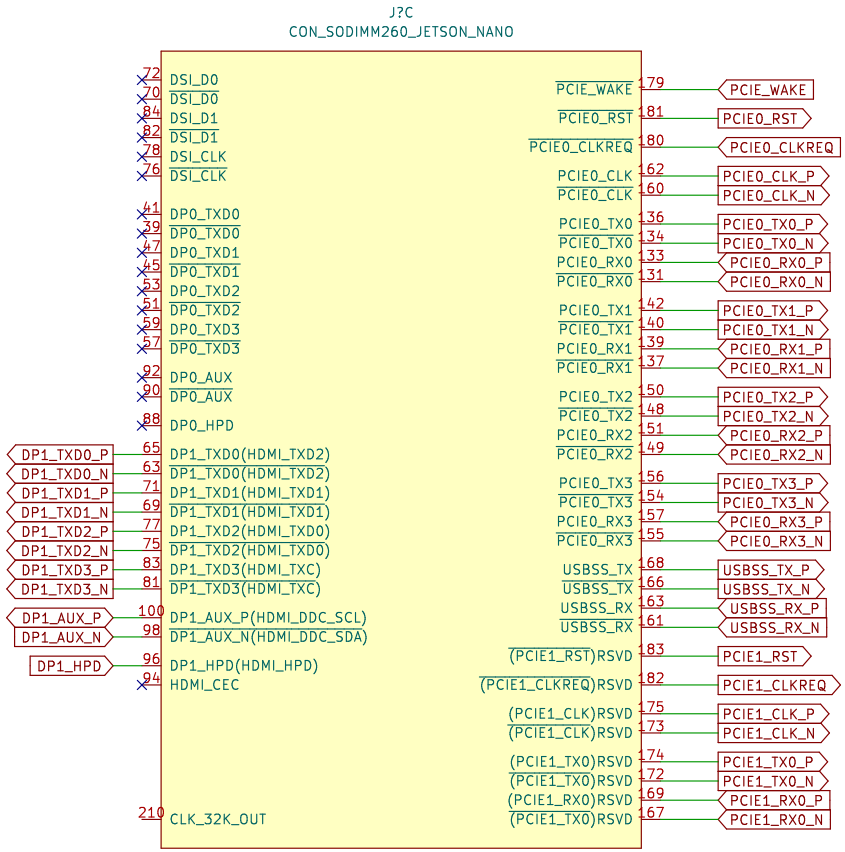
J?C
CON_SODIMM260_JETSON_NANO
72 DSI_D0
70 DSI_D0
84 DSI_D1
82 DSI_D1
78 DSI_CLK
76 DSI_CLK
41 DP0_TXD0
39 DP0_TXD0
47 DP0_TXD1
45 DP0_TXD1
53 DP0_TXD2
51 DP0_TXD2
59 DP0_TXD3
57 DP0_TXD3
92 DP0_AUX
90 DP0_AUX
88 DP0_HPD
65 DP1_TXD0(HDMI_TXD2)
63 DP1_TXD0(HDMI_TXD2)
71 DP1_TXD1(HDMI_TXD1)
69 DP1_TXD1(HDMI_TXD1)
77 DP1_TXD2(HDMI_TXD0)
75 DP1_TXD2(HDMI_TXD0)
83 DP1_TXD3(HDMI_TXC)
81 DP1_TXD3(HDMI_TXC)
100 DP1_AUX_P(HDMI_DDC_SCL)
98 DP1_AUX_N(HDMI_DDC_SDA)
96 DP1_HPD(HDMI_HPD)
94 HDMI_CEC
210 CLK_32K_OUT
DP1_TXD0_P
DP1_TXD0_N
DP1_TXD1_P
DP1_TXD1_N
DP1_TXD2_P
DP1_TXD2_N
DP1_TXD3_P
DP1_TXD3_N
DP1_AUX_P
DP1_AUX_N
DP1_HPD
PCIE_WAKE 79
PCIE0_RST 81
PCIE0_CLKREQ 80
PCIE0_CLK 62
PCIE0_CLK 60
PCIE0_TX0 36
PCIE0_TX0 34
PCIE0_RX0 33
PCIE0_RX0 31
PCIE0_TX1 42
PCIE0_TX1 40
PCIE0_RX1 39
PCIE0_RX1 37
PCIE0_TX2 50
PCIE0_TX2 48
PCIE0_RX2 51
PCIE0_RX2 49
PCIE0_TX3 56
PCIE0_TX3 54
PCIE0_RX3 57
PCIE0_RX3 55
USBSS_TX 68
USBSS_TX 66
USBSS_RX 63
USBSS_RX 61
(PCIE1_RST)RSVD 83
(PCIE1_CLKREQ)RSVD 82
(PCIE1_CLK)RSVD 75
(PCIE1_CLK)RSVD 73
(PCIE1_TX0)RSVD 74
(PCIE1_TX0)RSVD 72
(PCIE1_RX0)RSVD 69
(PCIE1_TX0)RSVD 67
PCIE_WAKE
PCIE0_RST
PCIE0_CLKREQ
PCIE0_CLK_P
PCIE0_CLK_N
PCIE0_TX0_P
PCIE0_TX0_N
PCIE0_RX0_P
PCIE0_RX0_N
PCIE0_TX1_P
PCIE0_TX1_N
PCIE0_RX1_P
PCIE0_RX1_N
PCIE0_TX2_P
PCIE0_TX2_N
PCIE0_RX2_P
PCIE0_RX2_N
PCIE0_TX3_P
PCIE0_TX3_N
PCIE0_RX3_P
PCIE0_RX3_N
USBSS_TX_P
USBSS_TX_N
USBSS_RX_P
USBSS_RX_N
PCIE1_RST
PCIE1_CLKREQ
PCIE1_CLK_P
PCIE1_CLK_N
PCIE1_TX0_P
PCIE1_TX0_N
PCIE1_RX0_P
PCIE1_RX0_N

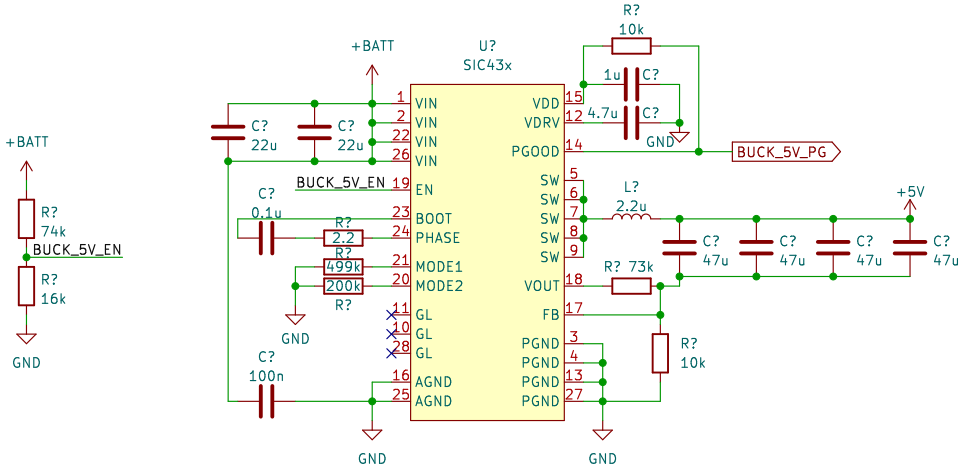
+BATT
R?
74k
BUCK_5V_EN
R?
16k
GND
+BATT
U?
SIC43x
C?
22u
C?
22u
BUCK_5V_EN
C?
0.1u
R?
2.2
R?
499k
200k
R?
GND
C?
100n
GND
VIN
VIN
VIN
VIN
EN
BOOT
PHASE
MODE1
MODE2
GL
GL
GL
AGND
AGND
VDD
VDRV
PGOOD
SW
SW
SW
SW
SW
VOUT
FB
PGND
PGND
PGND
PGND
R?
10k
1u
C?
4.7u
C?
GND
BUCK_5V_PG
L?
2.2u
+5V
C?
47u
C?
47u
C?
47u
C?
47u
R? 73k
R?
10k
GND

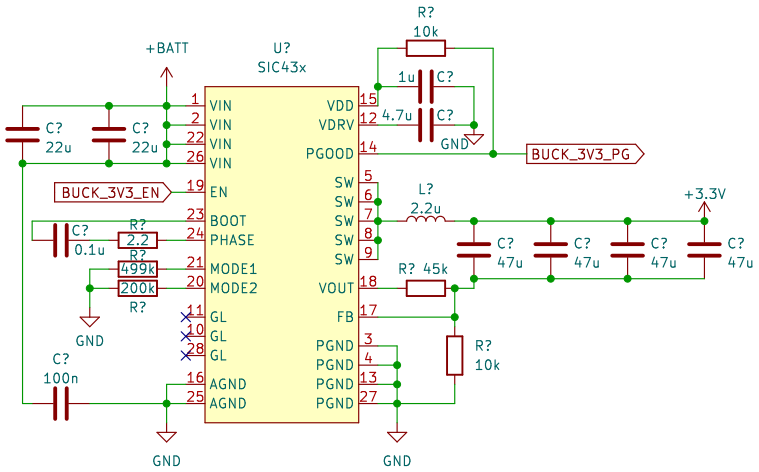
+BATT
U?
SIC43x
R?
10k
1u
C?
4.7u
C?
GND
BUCK_3V3_PG
C?
22u
C?
22u
BUCK_3V3_EN
C?
0.1u
R?
2.2
R?
499k
200k
R?
GND
C?
100n
GND
GND
L?
2.2u
+3.3V
C?
47u
C?
47u
C?
47u
C?
47u
R? 45k
R?
10k
VIN
VIN
VIN
VIN
EN
BOOT
PHASE
MODE1
MODE2
GL
GL
GL
AGND
AGND
VDD
VDRV
PGOOD
SW
SW
SW
SW
SW
VOUT
FB
PGND
PGND
PGND
PGND
1
2
22
26
19
23
24
21
20
11
10
28
16
25
15
12
14
5
6
7
8
9
18
17
3
4
13
27

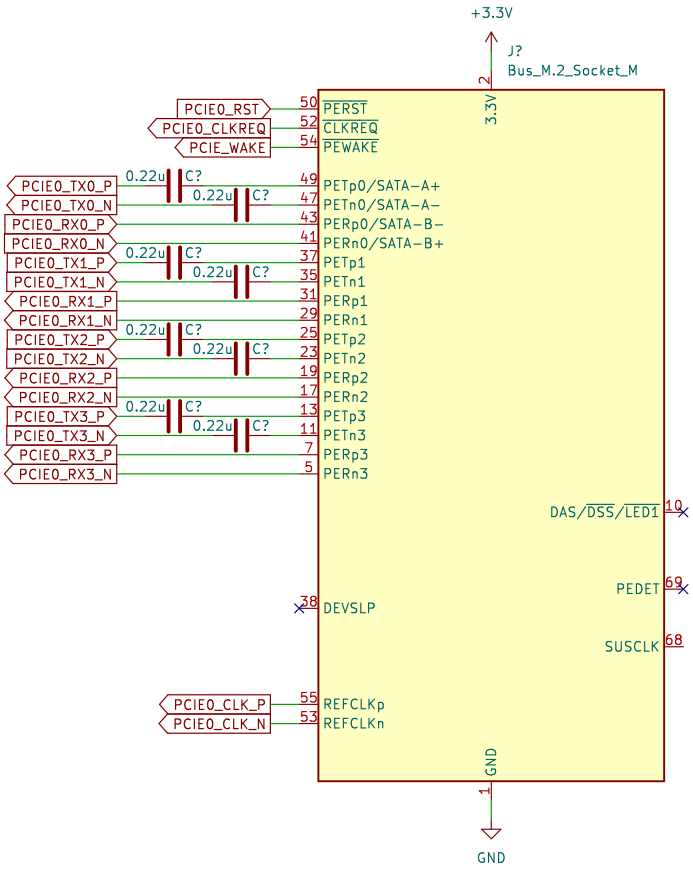
+3.3V
J?
Bus_M.2_Socket_M
2
3.3V
PCIE0_RST
PCIE0_CLKREQ
PCIE_WAKE
50
52
54
PERST
CLKREQ
PEWAKE
PCIE0_TX0_P
PCIE0_TX0_N
PCIE0_RX0_P
PCIE0_RX0_N
PCIE0_TX1_P
PCIE0_TX1_N
PCIE0_RX1_P
PCIE0_RX1_N
PCIE0_TX2_P
PCIE0_TX2_N
PCIE0_RX2_P
PCIE0_RX2_N
PCIE0_TX3_P
PCIE0_TX3_N
PCIE0_RX3_P
PCIE0_RX3_N
0.22u
C?
49
47
43
41
37
35
31
29
25
23
19
17
13
11
7
5
PETp0/SATA-A+
PETn0/SATA-A-
PERp0/SATA-B-
PERn0/SATA-B+
PETp1
PETn1
PERp1
PERn1
PETp2
PETn2
PERp2
PERn2
PETp3
PETn3
PERp3
PERn3
DAS/DSS/LED1
10
PEDET
69
38
DEVSLP
SUSCLK
68
PCIE0_CLK_P
PCIE0_CLK_N
55
53
REFCLKp
REFCLKn
GND
1
GND

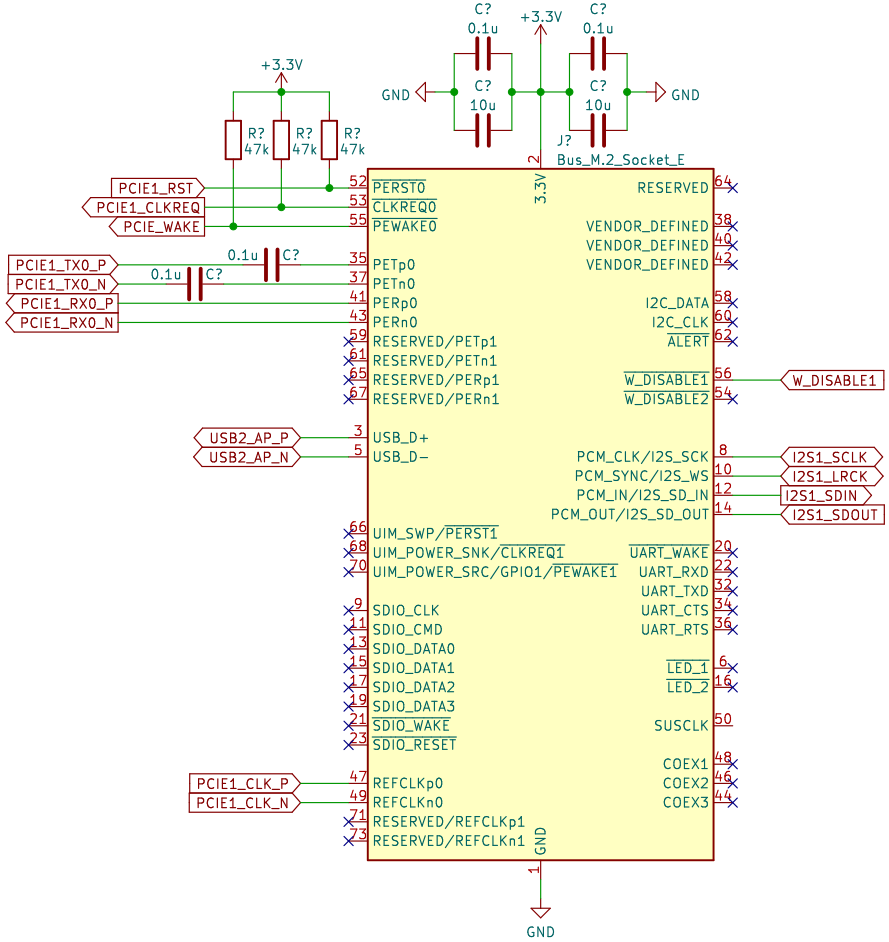
C?
0.1u
+3.3V
C?
0.1u
GND
C?
10u
C?
10u
GND
J?
2
Bus_M.2_Socket_E
+3.3V
R?
47k
R?
47k
R?
47k
PCIE1_RST
PCIE1_CLKREQ
PCIE_WAKE
52 PERST0
53 CLKREQ0
55 PEWAKE0
3.3V
RESERVED 64
VENDOR_DEFINED 38
VENDOR_DEFINED 40
VENDOR_DEFINED 42
0.1u
C?
0.1u
C?
PCIE1_TX0_P
PCIE1_TX0_N
PCIE1_RX0_P
PCIE1_RX0_N
35 PETp0
37 PETn0
41 PERp0
43 PERn0
I2C_DATA 58
I2C_CLK 60
ALERT 62
59 RESERVED/PETp1
61 RESERVED/PETn1
65 RESERVED/PERp1
67 RESERVED/PERn1
W_DISABLE1 56
W_DISABLE2 54
W_DISABLE1
USB2_AP_P
USB2_AP_N
3 USB_D+
5 USB_D−
PCM_CLK/I2S_SCK 8
PCM_SYNC/I2S_WS 10
PCM_IN/I2S_SD_IN 12
PCM_OUT/I2S_SD_OUT 14
I2S1_SCLK
I2S1_LRCK
I2S1_SDIN
I2S1_SDOUT
66 UIM_SWP/PERST1
68 UIM_POWER_SNK/CLKREQ1
70 UIM_POWER_SRC/GPIO1/PEWAKE1
UART_WAKE 20
UART_RXD 22
UART_TXD 32
UART_CTS 34
UART_RTS 36
9 SDIO_CLK
11 SDIO_CMD
13 SDIO_DATA0
15 SDIO_DATA1
17 SDIO_DATA2
19 SDIO_DATA3
21 SDIO_WAKE
23 SDIO_RESET
LED_1 6
LED_2 16
SUSCLK 50
COEX1 48
COEX2 46
COEX3 44
PCIE1_CLK_P
PCIE1_CLK_N
47 REFCLKp0
49 REFCLKn0
71 RESERVED/REFCLKp1
73 RESERVED/REFCLKn1
GND
1
GND

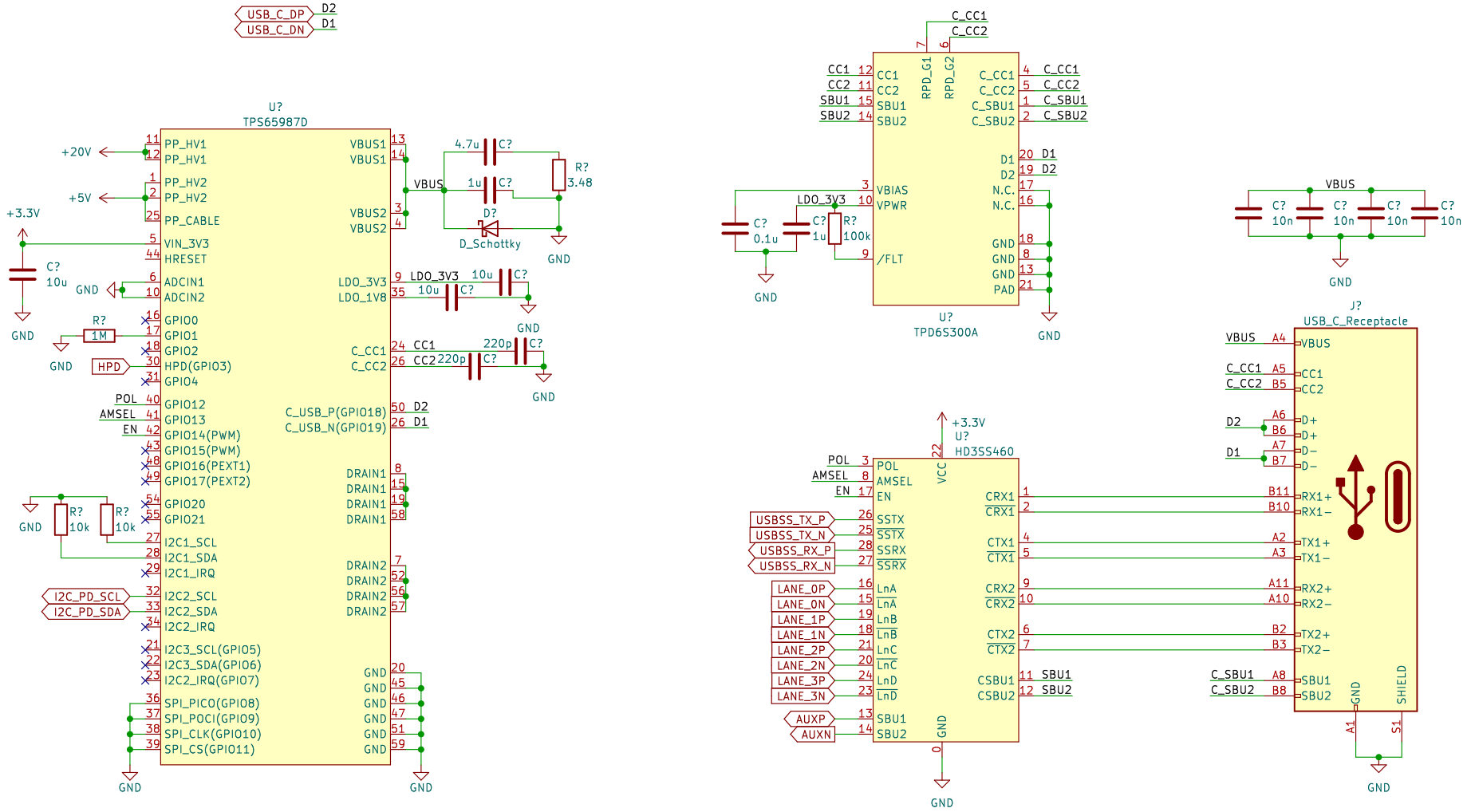

USB_C_DP
USB_C_DN
D2
D1
U?
TPS65987D
PP_HV1
PP_HV2
PP_CABLE
VIN_3V3
HRESET
ADCIN1
ADCIN2
GPIO0
GPIO1
GPIO2
HPD(GPIO3)
GPIO4
GPIO12
GPIO13
GPIO14(PWM)
GPIO15(PWM)
GPIO16(PEXT1)
GPIO17(PEXT2)
GPIO20
GPIO21
I2C1_SCL
I2C1_SDA
I2C1_IRQ
I2C2_SCL
I2C2_SDA
I2C2_IRQ
I2C3_SCL(GPIO5)
I2C3_SDA(GPIO6)
I2C2_IRQ(GPIO7)
SPI_PICO(GPIO8)
SPI_POCI(GPIO9)
SPI_CLK(GPIO10)
SPI_CS(GPIO11)
VBUS1
VBUS2
LDO_3V3
LDO_1V8
C_CC1
C_CC2
C_USB_P(GPIO18)
C_USB_N(GPIO19)
DRAIN1
DRAIN2
GND
+20V
+5V
+3.3V
C?
10u
R?
1M
HPD
POL
AMSEL
EN
R?
10k
I2C_PD_SCL
I2C_PD_SDA
4.7u
1u
R?
3.48
D?
D_Schottky
LDO_3V3
10u
CC1
CC2
220p
VBUS
C_CC1
C_CC2
C_SBU1
C_SBU2
RPD_G1
RPD_G2
VBIAS
VPWR
/FLT
D1
D2
N.C.
PAD
C?
0.1u
R?
100k
U?
TPD6S300A
VBUS
C?
10n
J?
USB_C_Receptacle
D+
D−
RX1+
RX1−
TX1+
TX1−
RX2+
RX2−
TX2+
TX2−
SHIELD
A1
S1
U?
HD3SS460
VCC
SSTX
SSRX
LnA
LnB
LnC
LnD
CRX1
CTX1
CRX2
CTX2
CSBU1
CSBU2
USBSS_TX_P
USBSS_TX_N
USBSS_RX_P
USBSS_RX_N
LANE_0P
LANE_0N
LANE_1P
LANE_1N
LANE_2P
LANE_2N
LANE_3P
LANE_3N
AUXP
AUXN

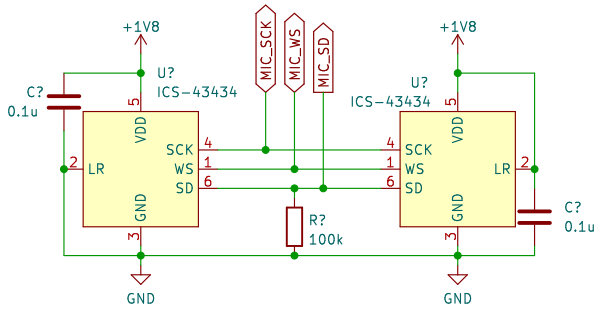
+1V8
MIC_SCK
MIC_WS
MIC_SD
+1V8
C?
0.1u
U?
ICS-43434
VDD
SCK
WS
SD
LR
GND
5
4
1
6
2
3
U?
ICS-43434
VDD
SCK
WS
SD
LR
GND
5
4
1
6
2
3
R?
100k
C?
0.1u
GND
GND

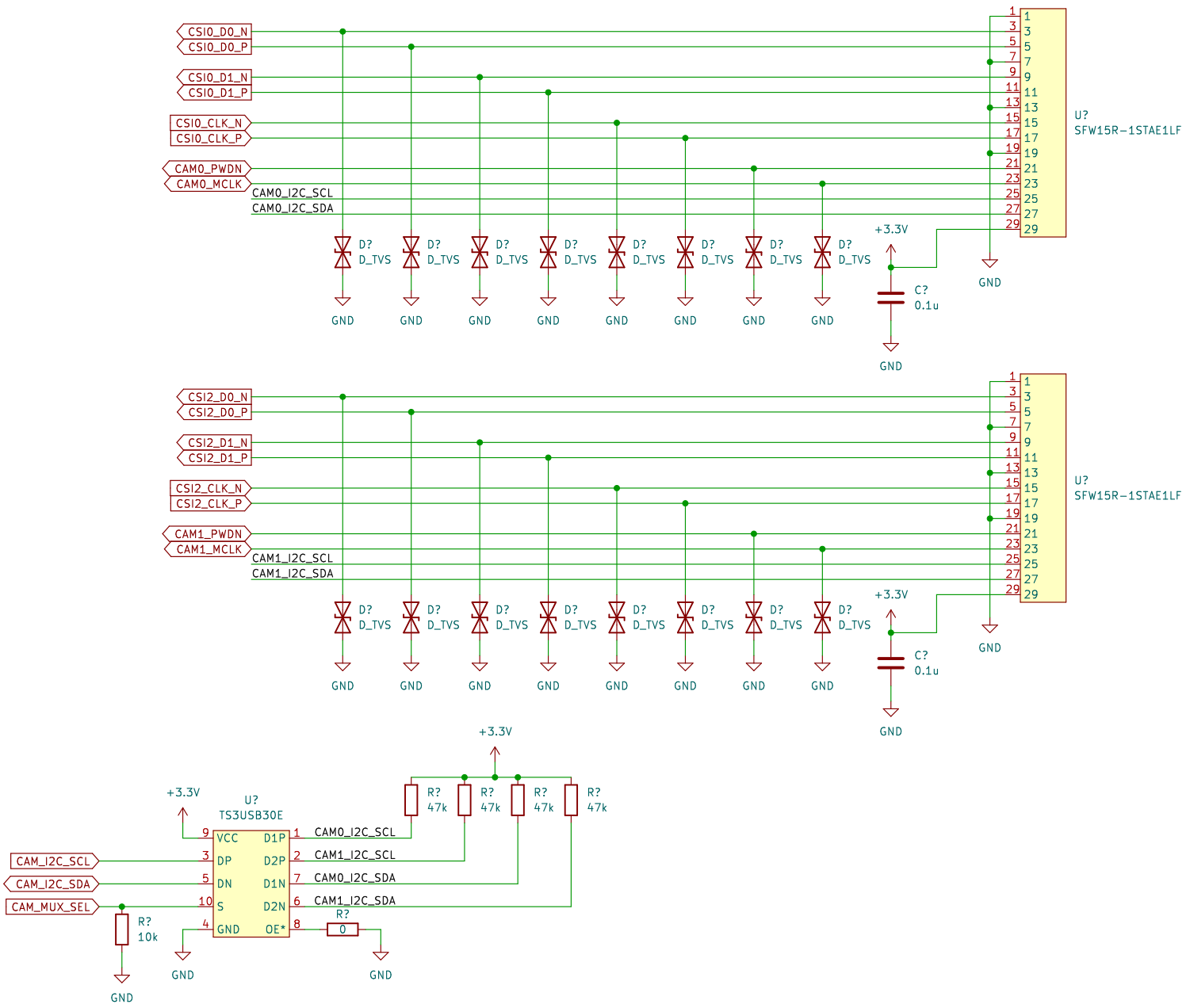
CSI0_D0_N
CSI0_D0_P
CSI0_D1_N
CSI0_D1_P
CSI0_CLK_N
CSI0_CLK_P
CAM0_PWDN
CAM0_MCLK
CAM0_I2C_SCL
CAM0_I2C_SDA
D? D_TVS
GND
+3.3V
C? 0.1u
U? SFW15R-1STAE1LF
CSI2_D0_N
CSI2_D0_P
CSI2_D1_N
CSI2_D1_P
CSI2_CLK_N
CSI2_CLK_P
CAM1_PWDN
CAM1_MCLK
CAM1_I2C_SCL
CAM1_I2C_SDA
CAM_I2C_SCL
CAM_I2C_SDA
CAM_MUX_SEL
U? TS3USB30E
VCC
DP
DN
S
GND
D1P
D2P
D1N
D2N
OE*
R? 47k
R? 10k
R? 0

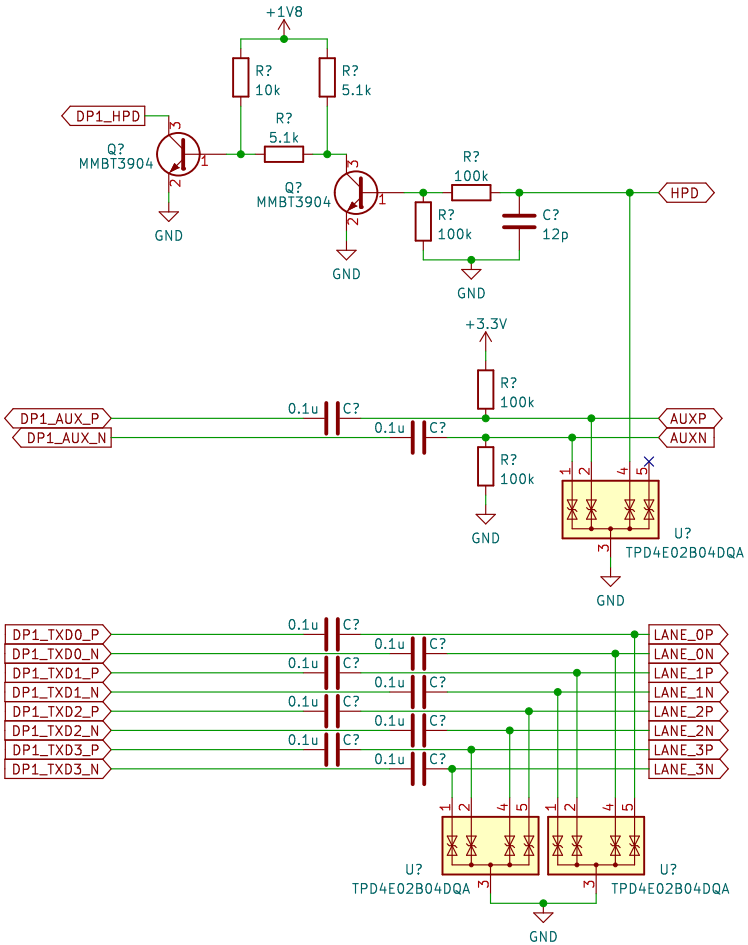
+1V8
R?
10k
R?
5.1k
DP1_HPD
R?
5.1k
Q?
MMBT3904
Q?
MMBT3904
R?
100k
HPD
R?
100k
C?
12p
GND
GND
GND
+3.3V
R?
100k
DP1_AUX_P
DP1_AUX_N
0.1u
C?
0.1u
C?
AUXP
AUXN
R?
100k
GND
U?
TPD4E02B04DQA
GND
DP1_TXD0_P
DP1_TXD0_N
DP1_TXD1_P
DP1_TXD1_N
DP1_TXD2_P
DP1_TXD2_N
DP1_TXD3_P
DP1_TXD3_N
LANE_0P
LANE_0N
LANE_1P
LANE_1N
LANE_2P
LANE_2N
LANE_3P
LANE_3N
U?
TPD4E02B04DQA
U?
TPD4E02B04DQA
GND

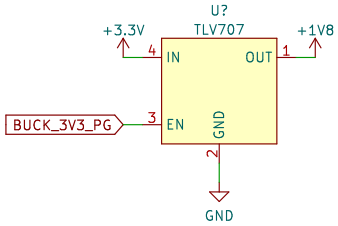
U?
TLV707
+3.3V
+1V8
IN
OUT
EN
GND
BUCK_3V3_PG
4
1
3
2
GND

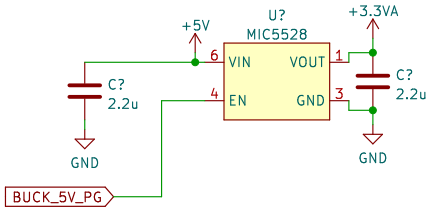
U?
MIC5528
+5V
+3.3VA
VIN
VOUT
EN
GND
C?
2.2u
C?
2.2u
GND
GND
BUCK_5V_PG
6
1
4
3

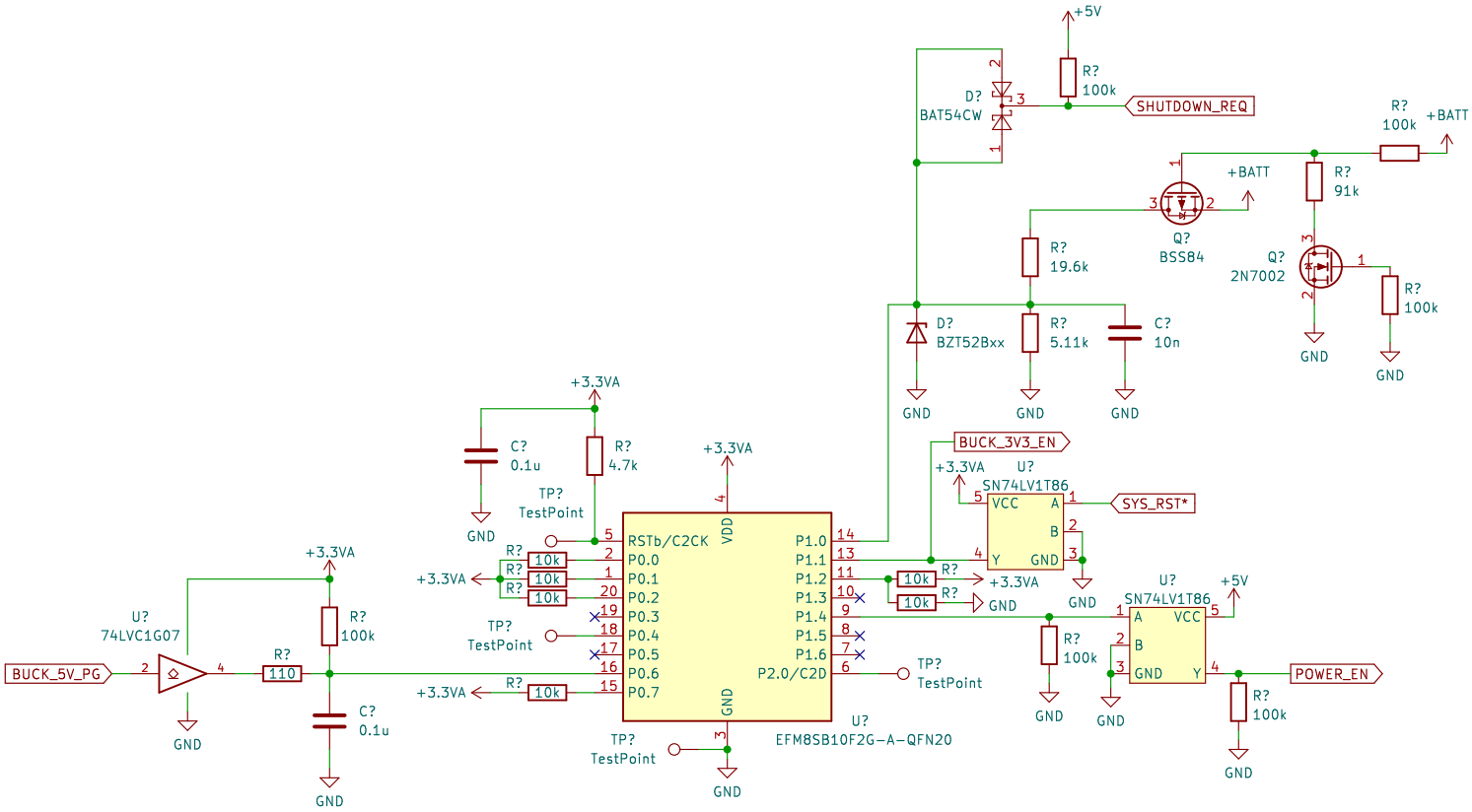

+5V
R?
100k
D?
BAT54CW
SHUTDOWN_REQ
R?
100k
+BATT
+BATT
R?
91k
Q?
BSS84
R?
19.6k
Q?
2N7002
R?
100k
D?
BZT52Bxx
R?
5.11k
C?
10n
GND
GND
GND
GND
GND
+3.3VA
C?
0.1u
R?
4.7k
+3.3VA
BUCK_3V3_EN
+3.3VA
U?
SN74LV1T86
VCC
A
B
Y
GND
SYS_RST*
TP?
TestPoint
RSTb/C2CK
VDD
P0.0
P0.1
P0.2
P0.3
P0.4
P0.5
P0.6
P0.7
P1.0
P1.1
P1.2
P1.3
P1.4
P1.5
P1.6
P2.0/C2D
GND
R?
10k
+3.3VA
TP?
TestPoint
TP?
TestPoint
TP?
TestPoint
U?
EFM8SB10F2G-A-QFN20
+3.3VA
U?
74LVC1G07
BUCK_5V_PG
R?
110
R?
100k
C?
0.1u
GND
GND
GND
U?
SN74LV1T86
+5V
A
VCC
B
GND
Y
R?
100k
POWER_EN
R?
100k
GND
GND
GND

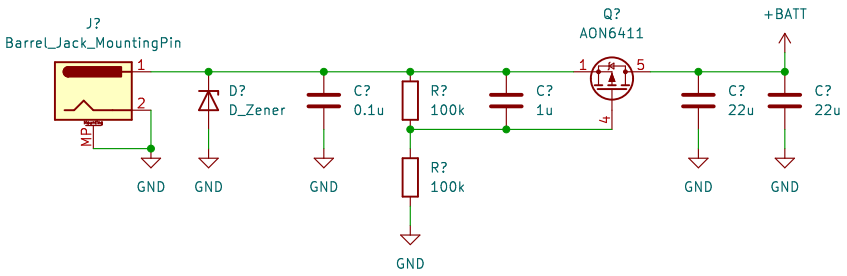
J?
Barrel_Jack_MountingPin
1
2
MP
GND
D?
D_Zener
GND
C?
0.1u
GND
R?
100k
R?
100k
GND
C?
1u
Q?
AON6411
1
5
4
C?
22u
GND
+BATT
C?
22u
GND

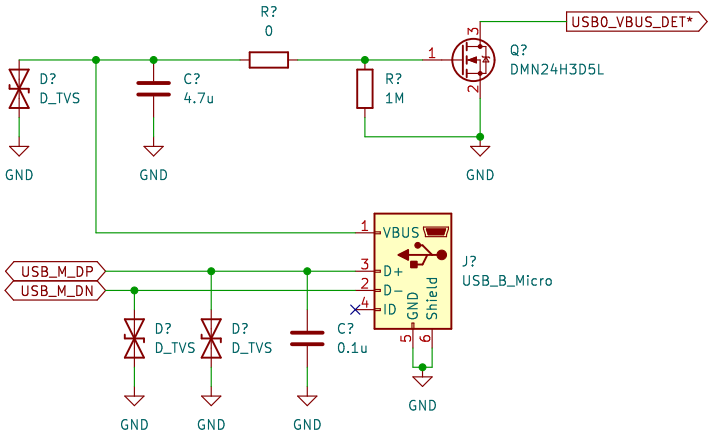
R?
0
USB0_VBUS_DET*
D?
D_TVS
C?
4.7u
R?
1M
Q?
DMN24H3D5L
GND
GND
GND
VBUS
D+
D−
ID
GND
Shield
J?
USB_B_Micro
USB_M_DP
USB_M_DN
D?
D_TVS
D?
D_TVS
C?
0.1u
GND
GND
GND
GND

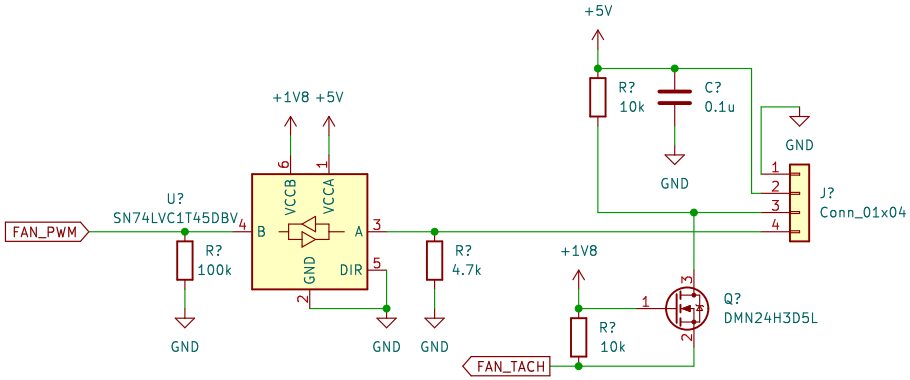
+5V
R?
10k
C?
0.1u
GND
GND
J?
Conn_01x04
+1V8 +5V
U?
SN74LVC1T45DBV
VCCB
VCCA
FAN_PWM
B
A
GND
DIR
R?
100k
R?
4.7k
+1V8
Q?
DMN24H3D5L
R?
10k
FAN_TACH
GND
GND
GND

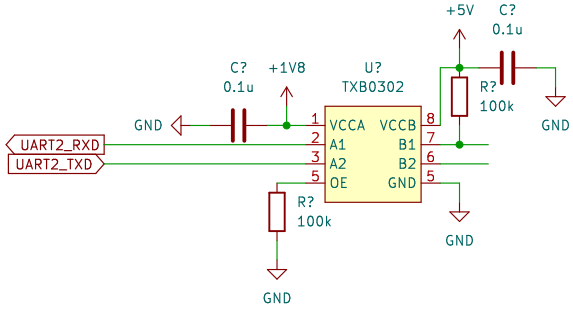
+5V
C?
0.1u
C?
0.1u
+1V8
U?
TXB0302
R?
100k
GND
GND
UART2_RXD
UART2_TXD
VCCA
VCCB
A1
B1
A2
B2
OE
GND
R?
100k
GND
GND