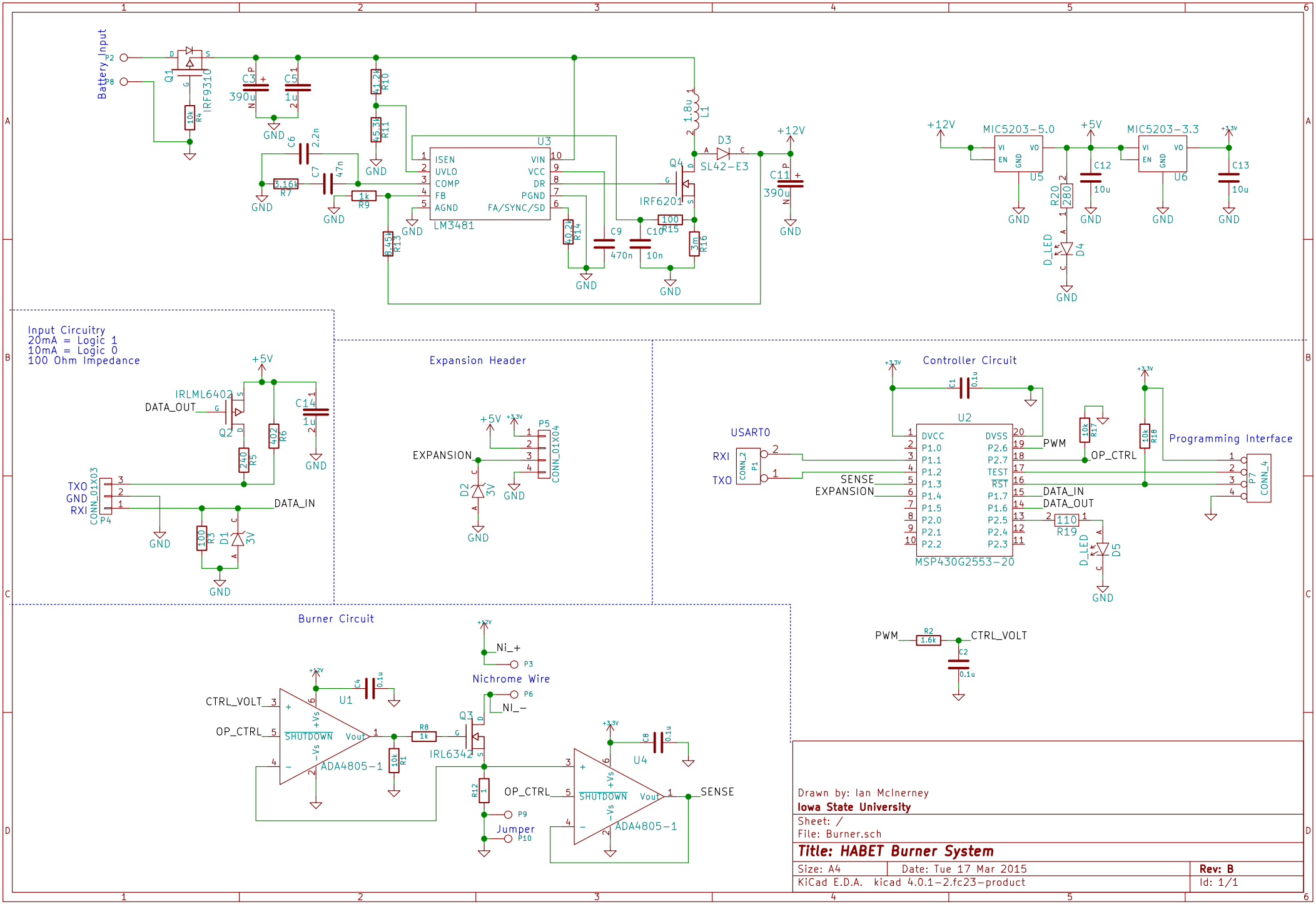
Battery Input
P2
P8
Q1
IRF9310
R4
10k
C3
390u
C5
1u
GND
R10
41.2k
R11
45.3k
C6
2.2n
C7
47n
R7
3.16k
R9
1k
R13
8.45k
U3
LM3481
ISEN
UVLO
COMP
FB
AGND
VIN
VCC
DR
PGND
FA/SYNC/SD
L1
1.8u
D3
SL42-E3
Q4
IRF6201
R14
40.2k
C9
470n
C10
10n
R15
100
R16
3m
C11
390u
+12V
MIC5203-5.0
U5
VI
VO
EN
GND
+5V
C12
10u
R20
280
D_LED
D4
MIC5203-3.3
U6
+3.3V
C13
10u
Input Circuitry
20mA = Logic 1
10mA = Logic 0
100 Ohm Impedance
IRLML6402
Q2
DATA_OUT
R5
240
R6
402
C14
1u
TXO
GND
RXI
CONN_01X03
P4
DATA_IN
R3
100
D1
3V
Expansion Header
EXPANSION
D2
P5
CONN_01X04
Controller Circuit
C1
0.1u
U2
MSP430G2553-20
DVCC
P1.0
P1.1
P1.2
P1.3
P1.4
P1.5
P2.0
P2.1
P2.2
DVSS
P2.6
P2.7
TEST
RST
P1.7
P1.6
P2.5
P2.4
P2.3
USART0
RXI
TXO
CONN_2
P1
SENSE
EXPANSION
PWM
OP_CTRL
DATA_IN
DATA_OUT
R17
10k
R18
10k
R19
110
D_LED
D5
Programming Interface
P7
CONN_4
PWM
R2
1.6k
CTRL_VOLT
C2
0.1u
Burner Circuit
CTRL_VOLT
OP_CTRL
U1
ADA4805-1
SHUTDOWN
Vout
+Vs
-Vs
C4
0.1u
R8
1k
R1
10k
Q3
IRL6342
Ni_+
P3
Nichrome Wire
P6
Ni_-
R12
1
P9
Jumper
P10
U4
C8
0.1u
SENSE
Drawn by: Ian McInerney
Iowa State University
Sheet: /
File: Burner.sch
Title: HABET Burner System
Size: A4
Date: Tue 17 Mar 2015
Rev: B
KiCad E.D.A. kicad 4.0.1-2.fc23-product
Id: 1/1