AV_OFF/ON

THE OPERATING SYSTEM FOR AV

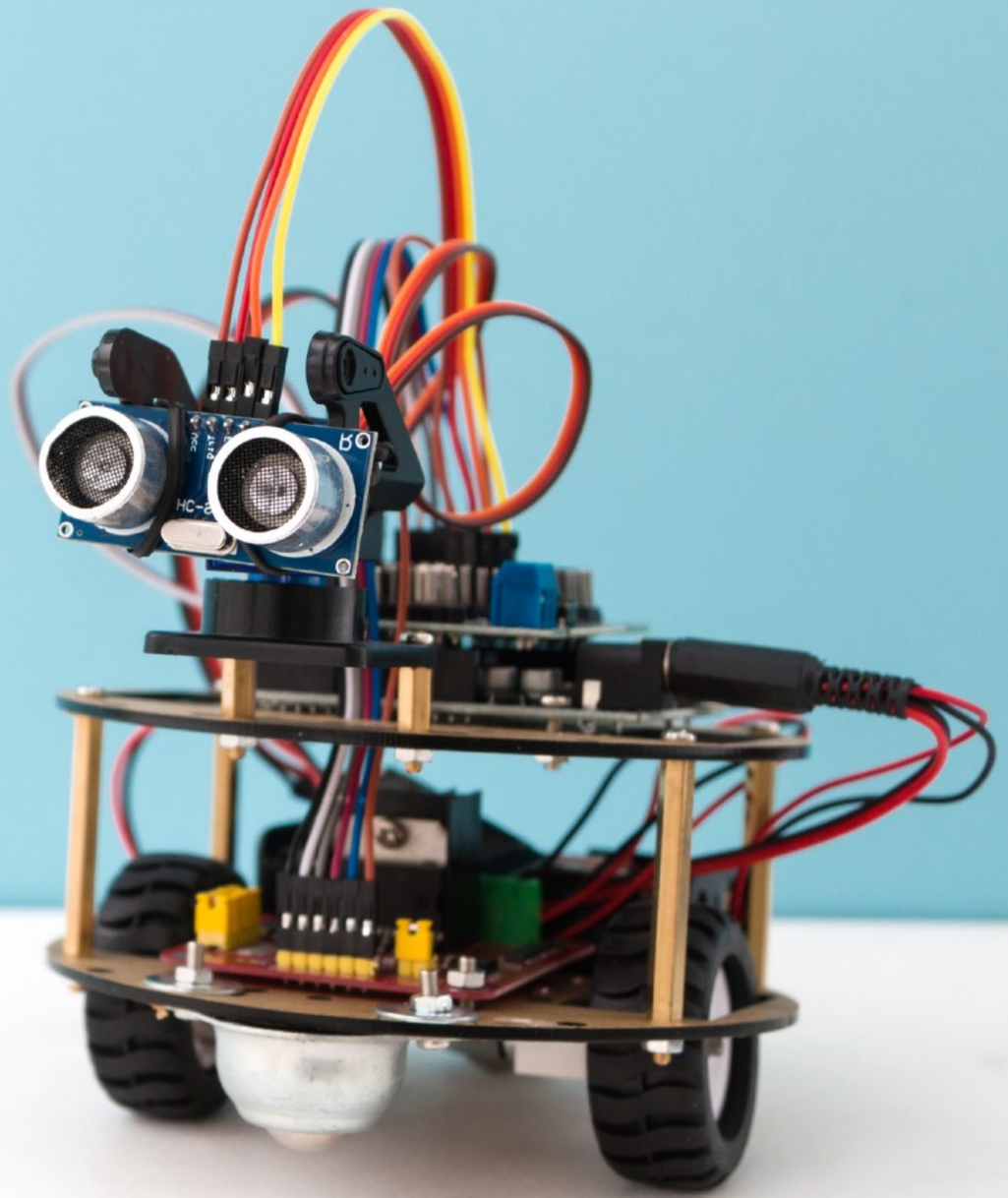

PROBLEM

Disconnected linear processes and teams across enterprise AV companies.

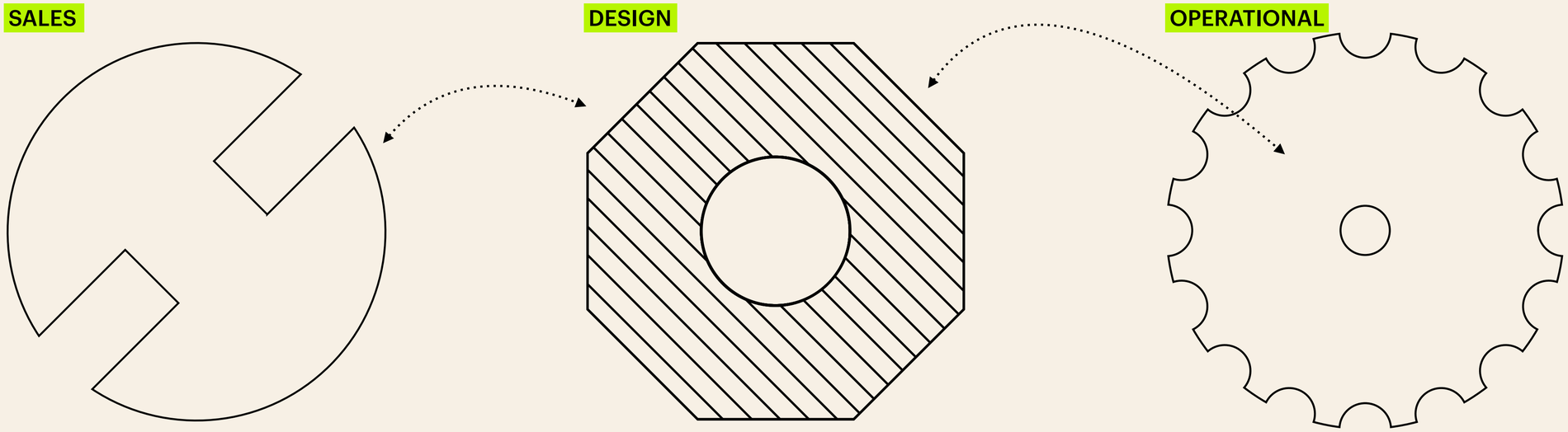

- Manufacturers
- Distribution
- Pricing
- Validation

- Scope of works
- Bill of Material
- CAD Design
- Installation

- Support
- Maintenance
- Monitoring
- Decommissioning