# PROBLEM

Disconnected linear processes and teams across enterprise AV companies.

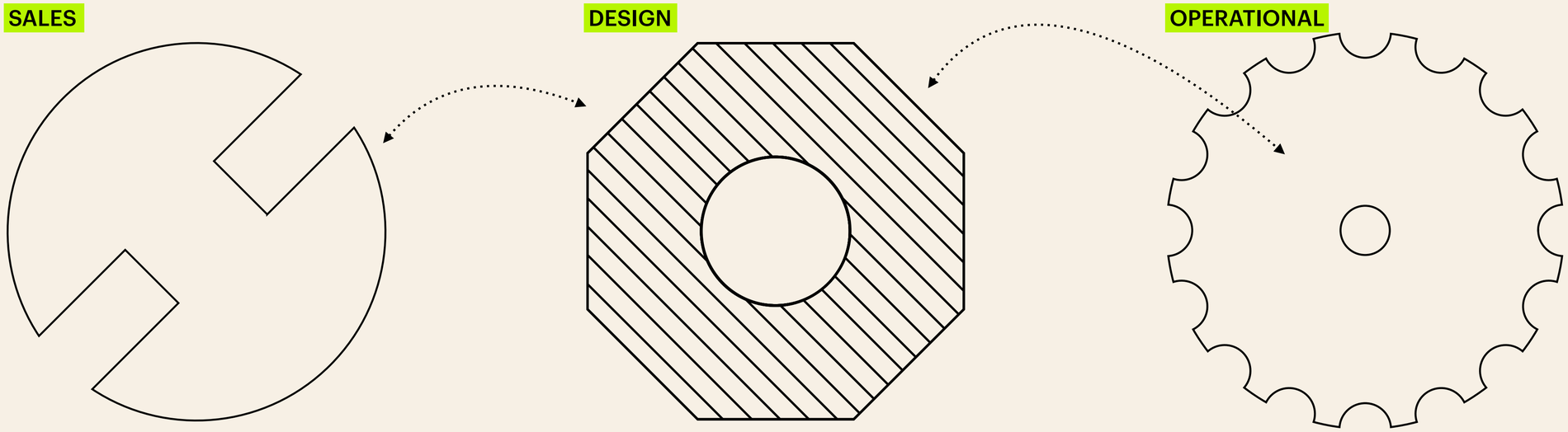


- Manufacturers
- Distribution
- Pricing
- Validation

- Scope of works
- Bill of Material
- CAD Design
- Installation

- Support
- Maintenance
- Monitoring
- Decommissioning

# EXAMPLES

Manufacturers all have their own version of system designer. But this is limiting for integrators.

**YEALINK**
Room designer for the configuration and validation of YEALINK Devices.

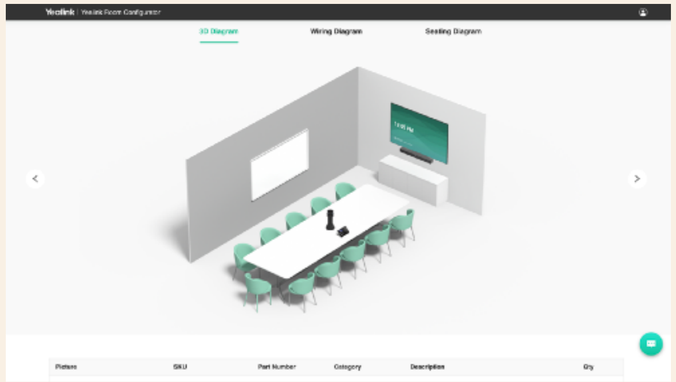


**CISCO**
Room designer for the configuration and validation of CISCO Devices.

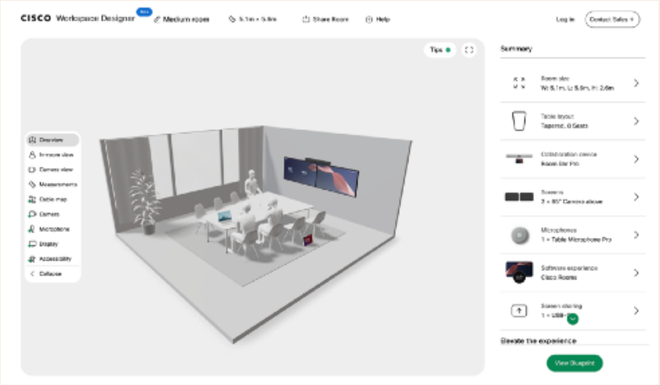


**NEAT**
Room designer for the configuration and validation of NEAT Devices.
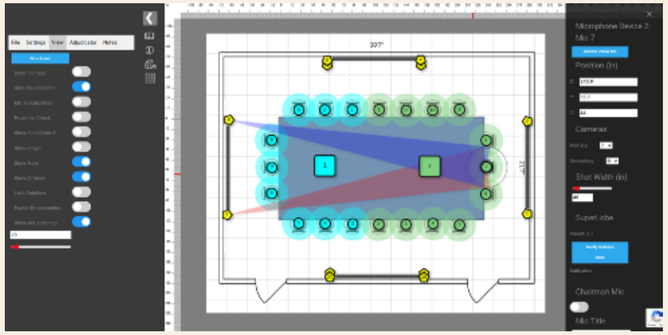
**CRESTRON**
Room designer for the configuration and validation of CRESTRON Devices.