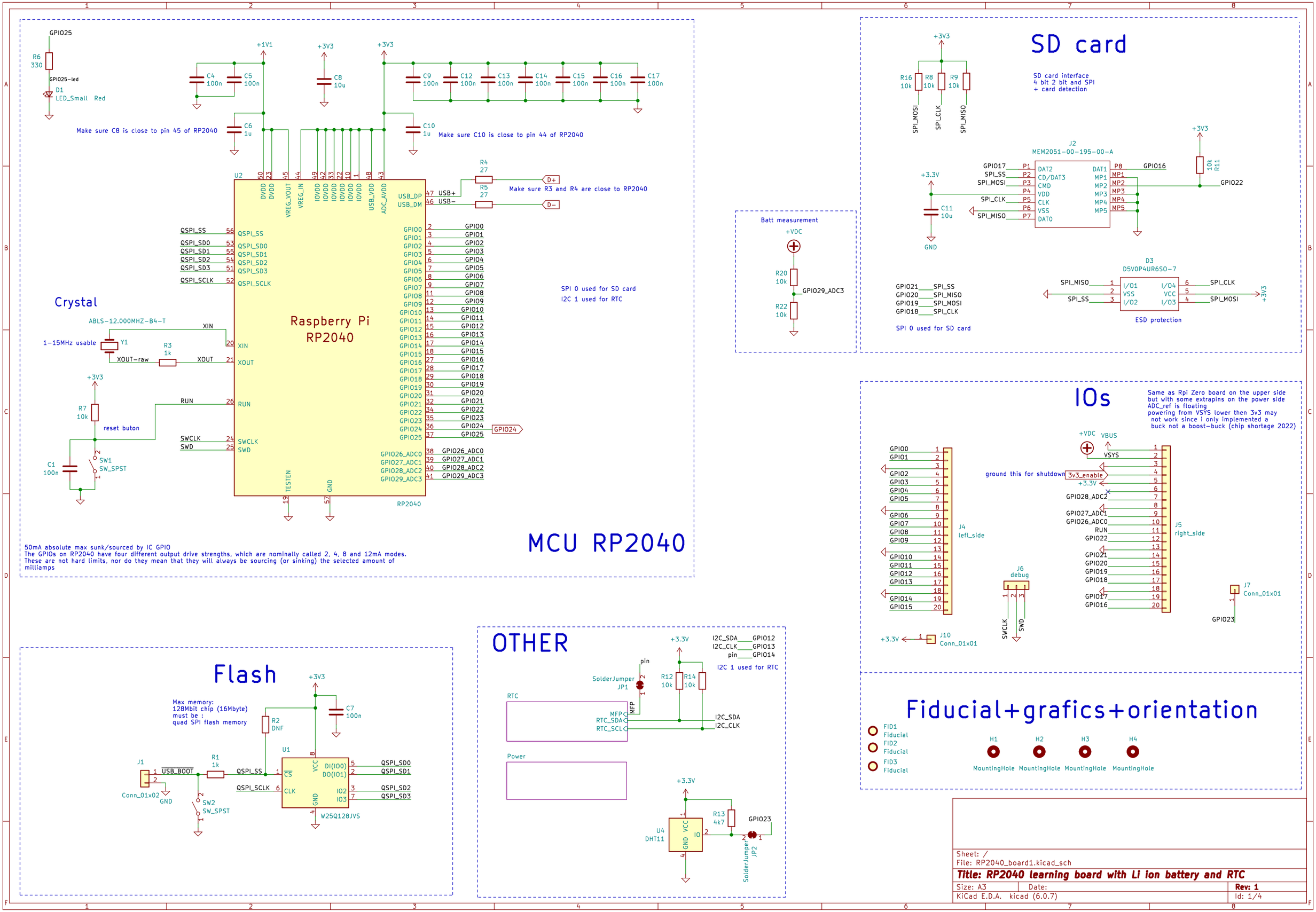
MCU RP2040
Raspberry Pi RP2040
RP2040
Make sure C8 is close to pin 45 of RP2040
Make sure C10 is close to pin 44 of RP2040
Make sure R3 and R4 are close to RP2040
SPI 0 used for SD card
I2C 1 used for RTC
Crystal
ABLS-12.000MHZ-B4-T
1-15MHz usable
reset buton
50mA absolute max sunk/sourced by IC GPIO
The GPIOs on RP2040 have four different output drive strengths, which are nominally called 2, 4, 8 and 12mA modes.
These are not hard limits, nor do they mean that they will always be sourcing (or sinking) the selected amount of milliamps
SD card
SD card interface
4 bit 2 bit and SPI
+ card detection
MEM2051-00-195-00-A
SPI 0 used for SD card
ESD protection
Batt measurement
IOs
Same as Rpi Zero board on the upper side
but with some extrapins on the power side
ADC_ref is floating
powering from VSYS lower then 3v3 may
not work since i only implemented a
buck not a boost-buck (chip shortage 2022)
ground this for shutdown
lefl_side
right_side
Conn_01x01
Fiducial+grafics+orientation
FID1 Fiducial
FID2 Fiducial
FID3 Fiducial
MountingHole
Flash
Max memory:
128Mbit chip (16Mbyte)
must be :
quad SPI flash memory
W25Q128JVS
OTHER
RTC
Power
I2C 1 used for RTC
SolderJumper JP1
SolderJumper JP2
DHT11
Sheet: /
File: RP2040_board1.kicad_sch
Title: RP2040 learning board with Li ion battery and RTC
Size: A3
Date:
Rev: 1
KiCad E.D.A. kicad (6.0.7)
Id: 1/4

Power

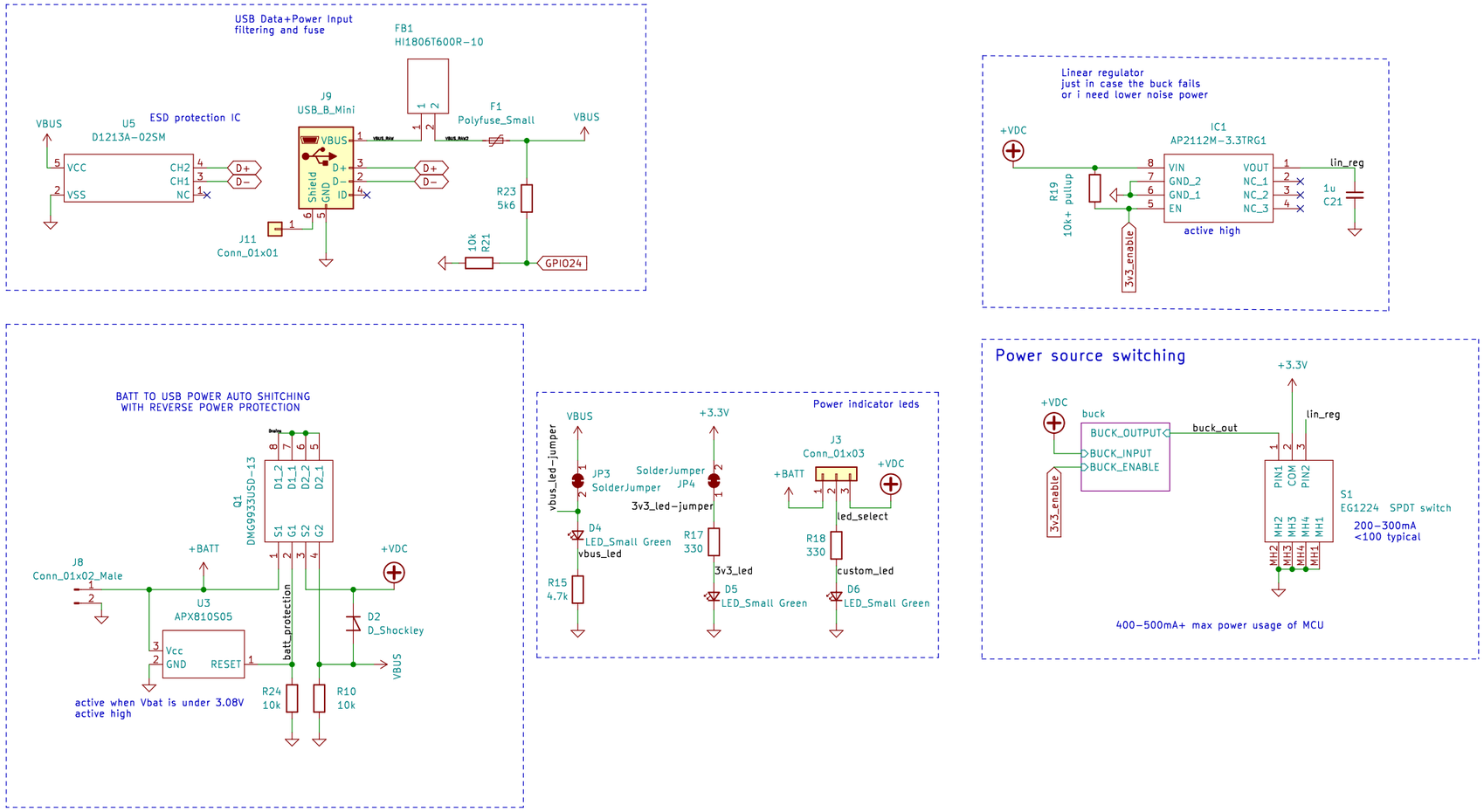

Sheet: /Power/
File: Power.kicad_sch

Title: RP2040 learning board with Li ion battery and RTC

Size: A3	Date:	Rev: 1
KiCad E.D.A. kicad (6.0.7)		Id: 2/4

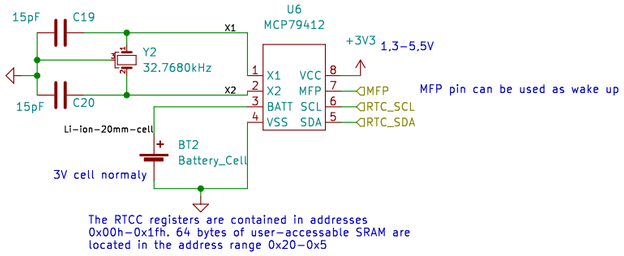

The RTCC registers are contained in addresses 0x00h-0x1fh. 64 bytes of user-accessable SRAM are located in the address range 0x20-0x5

Sheet: /RTC/
File: RTC.kicad_sch

Title: RP2040 learning board with Li ion battery and RTC

Size: A3	Date:	Rev: 1
KiCad E.D.A. kicad (6.0.7)		Id: 3/4

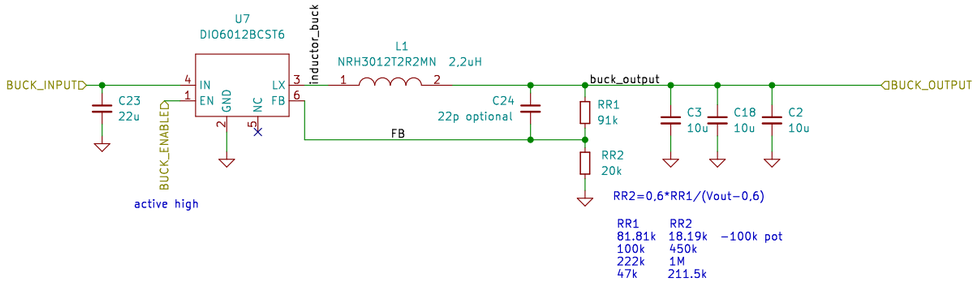

Sheet: /Power/buck/
File: buck.kicad_sch

Title: RP2040 learning board with Li ion battery and RTC

Size: A3	Date:	Rev: 1
KiCad E.D.A. kicad (6.0.7)		Id: 4/4