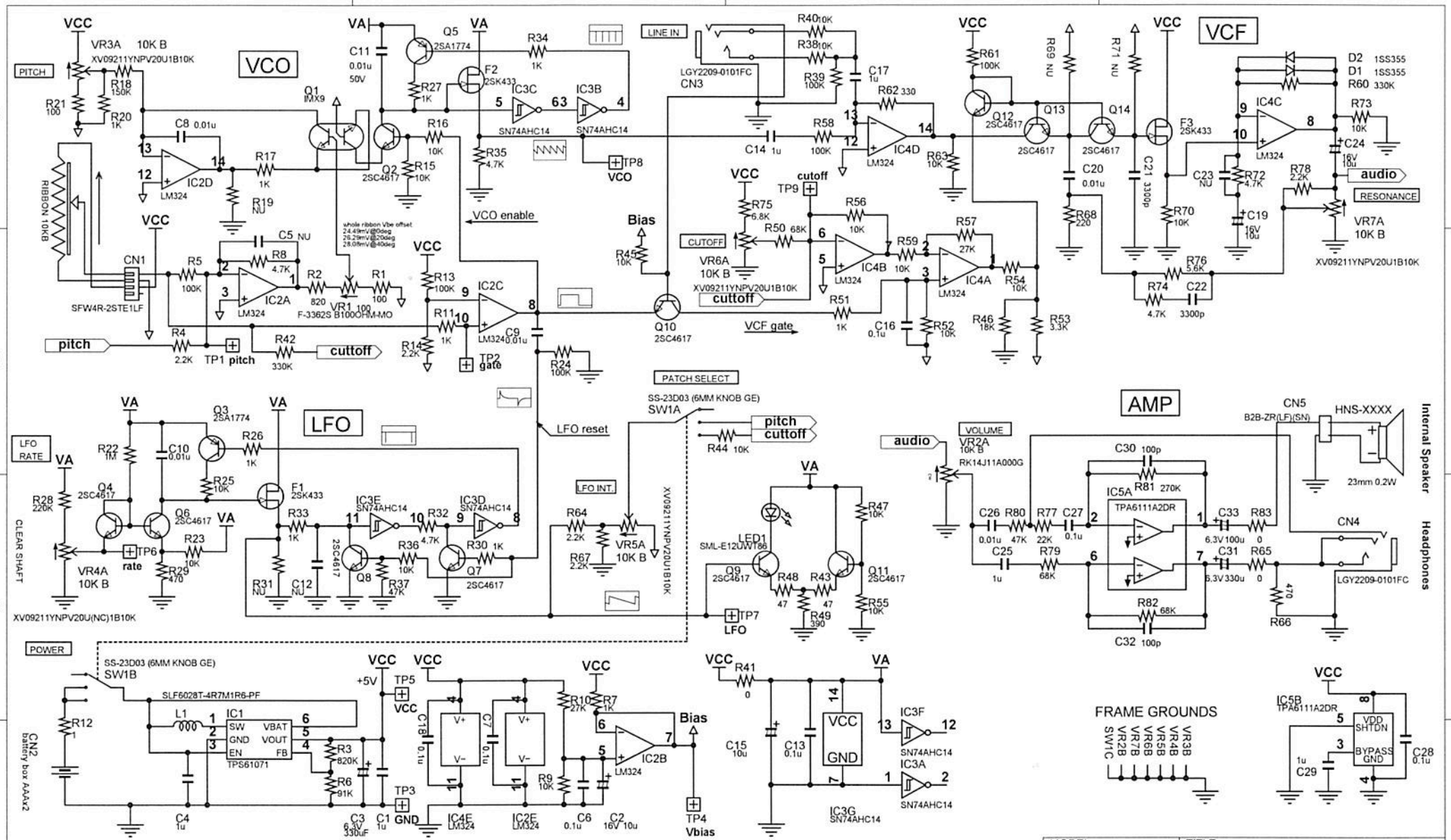
VCO
VCF
LFO
AMP
PITCH
LINE IN
CUTOFF
RESONANCE
PATCH SELECT
LFO RATE
LFO INT.
VOLUME
POWER
RIBBON 10KB
SFW4R-2STE1LF
CN1
CN3
LGY2209-0101FC
CN5
HNS-XXXX
Internal Speaker
Headphones
CN4
CN2
battery box AAAx2
CLEAR SHAFT
VR3A 10K B
XV09211YNPV20U1B10K
VR6A 10K B
VR7A 10K B
VR4A 10K B
VR2A 10K B
RK14J11A000G
VR5A 10K B
XV09211YNPV20U(NC)1B10K
SS-23D03 (6MM KNOB GE)
SW1A
SW1B
SW1C
SLF6028T-4R7M1R6-PF
TPS61071
IC1
IC2A
IC2B
IC2C
IC2D
IC3C
IC3B
IC3E
IC3D
IC3F
IC3A
IC3G
IC4A
IC4B
IC4C
IC4D
IC4E
IC5A
IC5B
TPA6111A2DR
LM324
SN74AHC14
LED1
SML-E12UWT86
pitch
cuttoff
audio
gate
rate
cutoff
VCF gate
VCO enable
LFO reset
Bias
Vbias
LFO
VCO
GND
+5V
VCC
VA
FRAME GROUNDS
SWIC VR2B VR7B VR6B VR5B VR4B VR3B
Details of this schematic are subject to change without notice.
Any modification to any monotron will immediately void its warranty.
Korg or any of its affiliates will not accept responsibility for any damages, personal loss or injury that may result from any modification to the device.
MODEL
monotron
TITLE
SCHEMATIC
FOR PUBLIC RELEASE
KORG
DATE
2010.10.13
DESIGNED BY
TATSUYA
TAKAHASHI