Proceedings of the ASME 2026
Fluid Engineering Division Summer Meeting
FEDSM2026
July 26–29, 2026, Bellevue, WA, USA

FEDSM2026-184261

AERODYNAMIC COEFFICIENT IDENTIFICATION FOR A SPHERICAL SAILING OMNIDIRECTIONAL ROVER (SSAILOR) VIA WIND TUNNEL TESTING

Aditya Varanwal[1,*], George Carrion[1], Parin Shah[1], Ashley Ortenburg[2], Diego Ramirez-Gomez[2], Chris Vermillion[2], Andre P. Mazzoleni[1]

[1]North Carolina State University, Raleigh, NC, USA
[2]University of Michigan, Ann Arbor, MI, USA

ABSTRACT

Scientific exploration in remote and harsh environments such as polar deserts and large arid basin remains challenging due to limited infrastructure and the difficulty of sustaining human presence. Wind-powered spherical rovers offer a promising solution because of their inherent stability and ability to exploit persistent winds for long duration, low power operation. However, existing wind-driven spherical rovers rely primarily on a drag based motion, which prevents sustained upwind travel and limits mission flexibility.

The Spherical Sailing Omnidirectional Rover (SSailOR) was developed to address this limitation by introducing a lift-based aerodynamic architecture. SSailOR combines a traction hoop, which provides lateral resistance analogous to a sailboat keel, with a main sail and jib sail that generates controllable lift for propulsion and heading control. This configuration enables net upwind motion while maintaining stability.

This paper presents an experimental aerodynamic characterization of SSailOR based on wind tunnel testing and aerodynamic coefficient identification. Two design variants were tested, with Design 2 incorporating a segmented traction hoop (replica of wire-mesh), increased sail planform area, and a reduced hull size to improve aerodynamic efficiency. Wind tunnel measurements were used to identify lift coefficients for the sails and direction-dependent drag coefficients for non-lifting components.

Results show that Design 2 produced higher lift and lower drag across the tested operating envelop, leading to a significantly improved lift-to-drag ratio suitable for upwind motion. The identified aerodynamic coefficients provide a foundation for high-fidelity dynamic modeling and control development of SSailOR.

Keywords: Wind tunnel experiment, aerodynamic coefficient identification,force measurement, lift, drag, spherical rover aerodynamics, lift-based wind propulsion, Fluid-structure interaction

*Corresponding author: avaranw@ncsu.edu

NOMENCLATURE

Roman letters

A	Reference area [m^2]
A_i, A_j	Projected frontal areas along body-fixed i and j axes [m^2]
AR	Aspect ratio
D	Aerodynamic drag force [N]
L	Aerodynamic lift force [N]
q	Dynamic pressure, $q = \frac{1}{2}\rho V^2$ [PSF]
S_{main}	Main sail planform area [m^2]
S_{jib}	Jib sail planform area [m^2]
V	Freestream wind speed [m s^{-1}]

Greek letters

α	Angle of attack [deg]
α_M	Main sail angle of attack [deg]
α_J	Jib sail angle of attack [deg]
ψ	Rover yaw angle [deg]
ρ	Air density [kg m^{-3}]

Dimensionless groups

C_L	Lift coefficient
C_D	Drag coefficient
C_{D_i}, C_{D_j}	Direction-dependent drag coefficients along body axes
C_{D0}	Zero-lift drag coefficient
e	Oswald efficiency factor

Superscripts and subscripts

i_O, j_O	Inertial frame axial and lateral directions
i_B, j_B	Body-fixed axial and lateral directions

1. INTRODUCTION AND MOTIVATION

Scientific exploration in remote and harsh terrestrial environments remains constrained by limited infrastructure, severe weather, and the logistical challenges associated with deploying and sustaining human research teams. Autonomous robotic platforms capable of long-duration operation with minimal onboard

Copyright ©2026 by ASME

energy are therefore of significant interest. Wind-powered rovers have emerged as a promising class of systems in this context, as persistent winds in many such environments can be leveraged for propulsion without reliance on stored energy.

Several wind-driven rover concepts have been explored in past, each addressing different aspects of mobility and robustness. Traditional land-sailing rovers [1] are capable of generating lift-based thrust and can make progress upwind, but typically lack self-righting capability and are vulnerable to overturning in gusty conditions. Conversely, spherical rovers such as Tumbleweed [2][3][4][5], are inherently self-righting due to their geometry, but rely primarily on drag-based propulsion, which prevents sustained upwind motion and limits controllability. A qualitative comparison of these classes of wind-powered rovers is summarized in Table 1, highlighting the trade-offs between self-righting capability and upwind mobility.

The Spherical Sailing Omnidirectional Rover (SSailOR) was developed to combine the advantages of both classes while mitigating their limitations. SSailOR achieves inherent stability and self-righting through a spherical architecture, while simultaneously enabling lift-based propulsion and omnidirectional mobility. As summarized in Table 1, SSailOR is both self-righting and capable of sustained upwind motion, a combination not achieved by prior wind-powered rover designs.

TABLE 1: Major distinctions between existing wind-powered rover concepts and the SSailOR

Rover Type	Self-Righting	Upwind-Capable
Land Sailer	×	✓
Tumbleweed Rover	✓	×
SSailOR	✓	✓

A schematic diagram of the SSailOR system is shown in Fig. 1, which illustrates the major structural and aerodynamic components considered in this study. The rover consists of a rotating spherical cage equipped with traction hoop that interfaces with the ground and an internally supported hull assembly that carries the aerodynamic surfaces and onboard systems. The traction hoop provides required ground contact and lateral resistance, creating a rolling constraint analogous to the keel or centerboard of a sailboat. This constraint is essential for converting aerodynamic lift into net forward motion rather than sideways slip. The internal hull is ballasted and constrained such that it aligns with the traction hoop without co-rotating with the cage, enabling self-righting behavior and maintaining stability during operation.

SSailOR employs two wing-sails, a main sail and a jib sail—that generate controllable aerodynamic lift for propulsion and heading control. By adjusting the angles of attack of the sails relative to the incoming wind and the rover heading, SSailOR can generate net thrust even when operating significantly upwind. Maintaining limited heel is critical to preserve traction hoop contact with the ground, further emphasizing the importance of accurate aerodynamic force and moment modeling.

Two SSailOR design variants were investigated in this study and are shown in Fig. 3 and Fig. 5. Design 1 represents a baseline configuration featuring a solid traction hoop and an initial sail sizing. Based on aerodynamic performance observations from

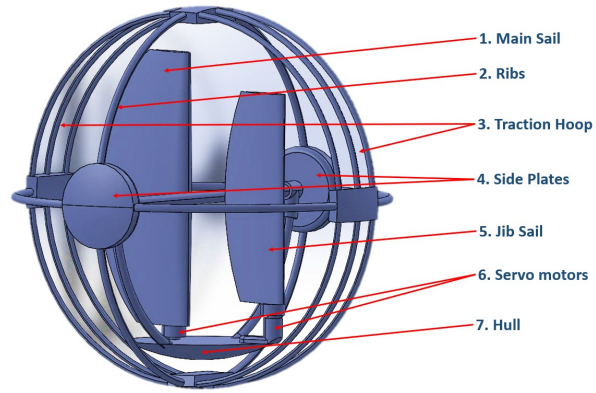

FIGURE 1: Schematic diagram of the SSailOR rover illustrating the main sail, jib sail, traction hoop, hull, ribs, side plates, and structural connectors.

Design 1 and CFD simulations (A complimentary computational study of the SSailOR is presented by Carrion et al. [6]), Design 2 introduced targeted improvements intended to enhance lift-to-drag ratio. These changes include a segmented three-ring traction hoop architecture to reduce unnecessary drag and flow obstruction, an increase in total sail area to improve lift generation, and reduction in hull size to lower form drag. Visual comparison of the two configurations in Fig. 5 highlights these geometric and architectural differences, which form the basis for the experimental design comparison presented in this paper.

Accurate aerodynamic characterization of SSailOR is essential for high-fidelity dynamic modeling and closed-loop control development. In particular, reliable lift and drag coefficients are required for the main and jib sails, along with drag characteristics for non-lifting components such as the hull, traction hoop, ribs, side plates, and connectors. Due to the geometric complexity of the rover and the coupled aerodynamic interactions among components, analytical estimates alone are insufficient for implementation-quality models.

TABLE 2: Comparison of Design 1 and Design 2 Geometric and Structural Features

Parameter	Design 1	Design 2	Unit
Main-sail airfoil	NACA0020	NACA0020	–
Main-sail area	0.0215	0.0392	m^2
Main-sail AR	2.15	2.10	–
Jib-sail airfoil	NACA0025	NACA0020	–
Jib-sail area	0.0129	0.0201	m^2
Jib-sail AR	2.64	2.41	–
Traction hoop	Solid	3-Ring design	–
Hull frontal area	0.0061	0.0022	m^2
Rib c/s shape	T-shape	Circular	–

To address this need, comprehensive wind tunnel testing was conducted using scaled SSailOR models under a wide range of operating conditions. The parameters varied during testing are summarized in Table 3, including freestream wind speed, rover

Copyright ©2026 by ASME

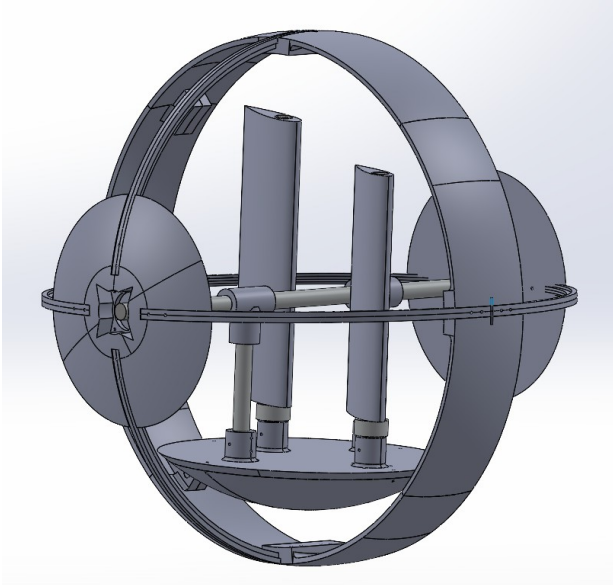

FIGURE 2: Design 1 CAD (Baseline Design)

heading angle relative to the flow, sail angles of attack, and rib rotation rate. This systematic variation produced a rich dataset of aerodynamic forces and moments suitable for coefficient identification and design comparison.

The primary contributions of this work are threefold. First, a comprehensive wind tunnel testing methodology is developed and applied to two SSailOR design variants across a broad operating envelope, enabling direct experimental comparison of their aerodynamic force characteristic. Second, motivated by significantly improved lift and drag behavior observed in the experiments, aerodynamic coefficient identification is performed for Design 2. Lift coefficients are identified for the main sail and jib sail, while direction-dependent drag coefficients are obtained for non-lifting components using wind tunnel force measurements. Third, the identified coefficient provide a quantitative and reusable aerodynamic representation of the design changes introduced in Design 2, capturing their impact in a form suitable for

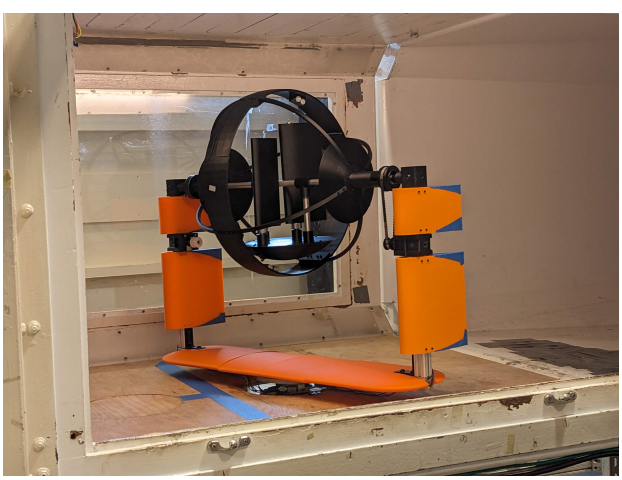

FIGURE 3: Design 1 Prototype (Baseline Design)

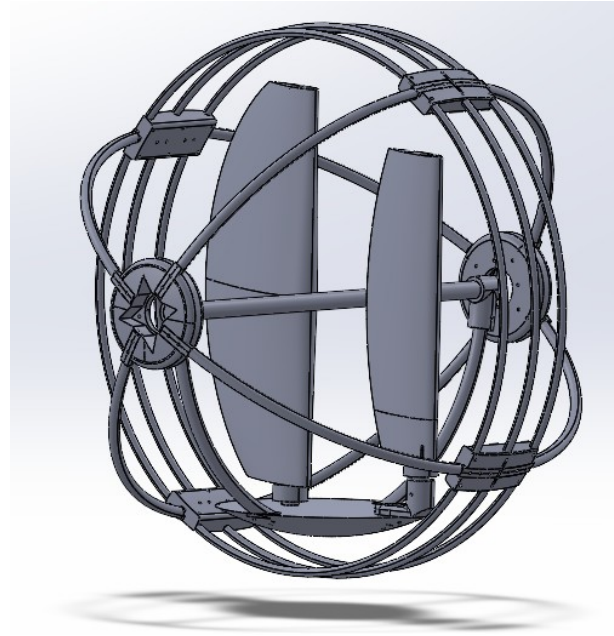

FIGURE 4: Design 2 CAD (Improvised Design)

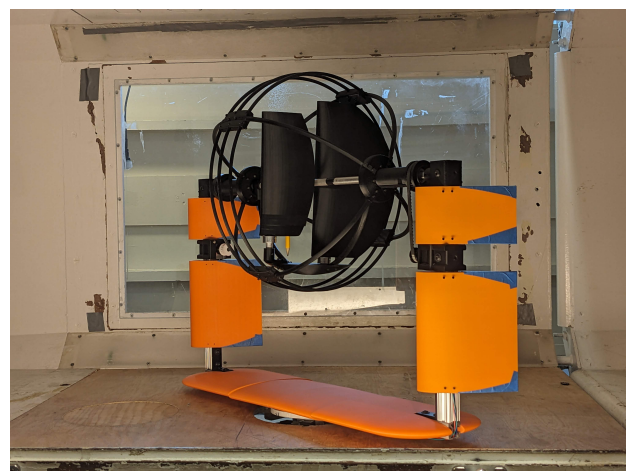

FIGURE 5: Design 2 Prototype (Improvised Design)

dynamic modeling and control development. Together, these results establish a foundation for high-fidelity modeling and future validation of sustained upwind mobility for SSailOR.

2. WIND TUNNEL EXPERIMENT

Wind tunnel tests were performed to measure aerodynamic forces and moments acting on the SSailOR rover and to generate the data required for aerodynamic coefficient identification. All tests were conducted using scaled physical models under controlled flow conditions to allow repeatable measurements while systematically varying key operating parameters.

2.1. Wind Tunnel Facility

Testing was carried out in the closed-loop subsonic wind tunnel at North Carolina State University with test section of 32*45*46 (in inches). The tunnel provides steady freestream flow and is well suited for low-speed aerodynamic experiments

Copyright ©2026 by ASME

TABLE 3: Summary of wind tunnel test parameters investigated in this study

Parameter	Values Tested	Units
Freestream wind speed	9.18, 11.24	m/s
Rover heading (yaw)	20, 30, 40	degree
Main sail angle of attack	0 – 16	degree
Jib sail angle of attack	0 – 18	degree
Rotation rate	0, 60, 80	RPM
Reynolds number	$1.5\times10^5 - 2.5\times10^5$	–
Test configurations per design	30	–

involving complex geometries. Two freestream wind speeds were selected to achieve Reynolds numbers representative of the intended operating regime of SSailOR when accounting for model scaling.

Because of the relatively large projected area of the rover model, blockage effects were considered. The model occupied approximately 10% of the wind tunnel test section's cross-sectional area. As a result, blockage corrections were applied to the measured aerodynamic loads to account for flow acceleration and confinement effects within the test section (as described in section 4.2). These corrections were applied during post-processing and are reflected in the results presented later in this paper.

2.2. Scaled Rover Models

Two SSailOR design configurations, referred to as Design 1 and Design 2, were tested (shown in Fig. 3 and Fig. 5). Both models were fabricated at a geometric scale factor of 0.4 relative to the full-scale rover and included all major aerodynamic and structural components relevant to this study. These components consisted of the main sail, jib sail, traction hoop, outer spherical cage (ribs), internal hull, side plates, and structural rig.

During testing, the main sail and jib sail were fixed at prescribed angles of attack based on the test matrix. The sails were rigidly mounted and did not deform under aerodynamic loading. This approach ensured consistency across test runs and allowed direct comparison of aerodynamic behavior between different configurations and operating conditions.

2.3. Mounting Configuration and Degree of Freedom

The rover model was mounted on a custom-built support structure positioned above the force–moment measurement system. A six-component load sensor was placed beneath the support structure and rigidly attached to the rover body, such that all measured forces and moments were expressed in the rover body-fixed frame.

Yaw variation was achieved by mounting the load sensor on a motorized rotating plate. By rotating the sensor and rover assembly together, the rover heading relative to the incoming flow could be adjusted without altering the sensor reference frame. This configuration ensured that changes in measured loads were due to changes in flow orientation rather than coordinate transformations.

Rotation of the outer spherical cage (ribs) was enabled independently using a stepper motor integrated into the mounting structure. Rib rotation was actively driven and controlled during testing, allowing investigation of aerodynamic effects associated with cage motion. To reduce flow disturbance from the mounting structure, fairings has been used. For vertical structure, NACA airfoil profiles were used for fairings whereas elliptical fairings were used for horizontal structure elements. The mounting structure with fairings and other components is shown in Fig. 6.

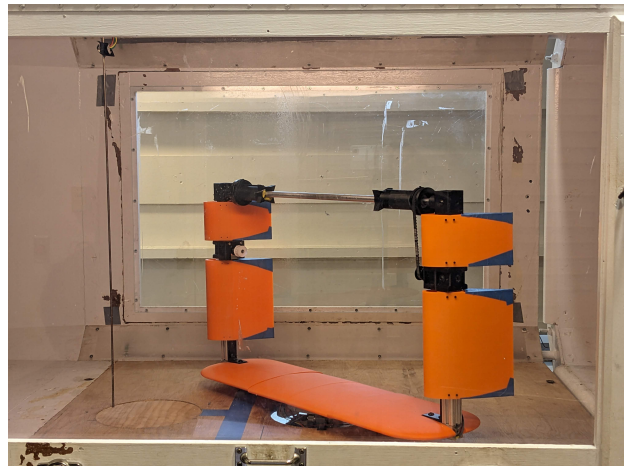

FIGURE 6: Mounting Structures with Fairings

2.4. Coordinate Systems

All aerodynamic forces and moments were measured in a rover body-fixed coordinate system, as the force–moment sensor was rigidly attached to the rover body. The orientation of the body-fixed axes relative to the incoming freestream, along with the definition of rover yaw angle, is illustrated in Fig. 7. Both the body-fixed and inertial reference frames are shown in the schematic and are used consistently throughout the analysis. The axial body axis (X_B or i_B) aligns with the rover heading direction, while lateral body axis (Y_B or j_B) aligns with the rover pitch direction. The angle between the body fixed axial axis and the inertial reference frame is the rover yaw angle (ψ). Using the measured forces in body frame, rotation matrices have been used to calculate lift force L (along Y_O or j_O) and drag forces D (along X_O or i_O).

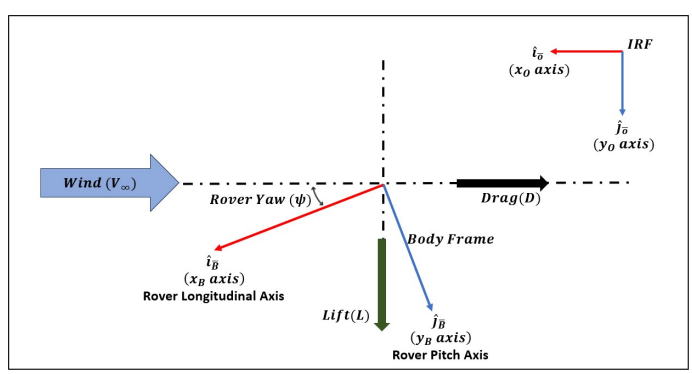

FIGURE 7: Coordinate System in Wind Tunnel Test

Copyright ©2026 by ASME

2.5. Instrumentation and Date Acquisition

Aerodynamic loads were measured using a six-component force–moment sensor (Gamma model, ATI Industrial Automation). The specific model used was ATI Gamma FT16284. The sensor provided simultaneous measurements of forces and moments along all three orthogonal axes.

Data were acquired at an effective sampling rate of 100 Hz. For each test condition, measurements were recorded continuously for 30 seconds after an initial settling period. Each test configuration was repeated 10 times to assess repeatability and reduce the influence of run-to-run variability.

2.6. Test Procedure and Test Matrix

For each test condition, the experimental sequence followed a consistent procedure. After initializing the wind tunnel and rover systems, a settling period of approximately 5 seconds was allowed to ensure steady flow and stable operation. Data acquisition was then initiated and continued for a 30-second interval. Once the data collection period was complete, the system was powered down and reconfigured for the next test condition.

Also, independent tests were performed to capture forces and moments due to structure only. This was used to subtract from the rover test. This provides absolute aerodynamic forces experienced by the rover only.

The wind tunnel test matrix was designed to explore the aerodynamic response of the rover over a broad range of operating conditions. Parameters varied during testing included freestream wind speed, rover yaw angle, main sail angle of attack, jib sail angle of attack, and rib rotation rate. A summary of the parameters investigated is provided in Table 3. For each design, 30 distinct test configurations were evaluated, resulting in a dataset suitable for subsequent filtering, averaging, and aerodynamic coefficient identification.

3. WIND TUNNEL TEST RESULTS

This section summarizes the force measurements obtained from the wind tunnel tests for Design 1 and Design 2. The goal here is to examine how the measure lift and drag forces vary with sail angle of attack, rover yaw, wind speed and rover rotational speed, and to compare the overall aerodynamic performance of the two designs before proceeding to coefficient identification.

3.1. Data Averaging and Baseline Subtraction

For each test condition in the test matrix, multiple runs were conducted to ensure repeatable measurements. Depending on the condition, five to ten iterations were performed for each test conditions. In each iteration, data were recorded for approximately 20 seconds after flow settled. The force values shown in the plots corresponds to time averaged after removing any outliers.

The forces presented here represent the net aerodynamic loads acting on the complete rover, including contributions from main sail, jib sail, hull, traction hoop, ribs, and side plates. Only the main sail and jib sail are lifting parts. As the rover was placed on the support structure, separate tests were performed to get the residual forces due to structure only for all different configurations (yaw position and wind speeds) which subtracted from the recorded data. This correction accounts for aerodynamic loading on the support structure and ensures that the reported forces corresponds to the rover only.

3.2. Design 1: Lift and Drag Force Behavior

For Design 1, wind tunnel test results at 1 PSF are shown in Fig. 8 for different yaw positions, while the corresponding results at 1.5 PSF are shown in Fig. 9. Due to solid traction hoop geometry in Design 1, the drag forces were significantly high. Also, Design 1 had smaller sail sizes (Table 2), which resulted lower lift forces. Served as baseline design, Design 1 has given meaningful and important insights which were used during Design 2 development. To understand coupled aerodynamic behavior of Design 1 sails, separate tests were conducted to get the lift and drag forces on sail + hull configuration [7] [8].

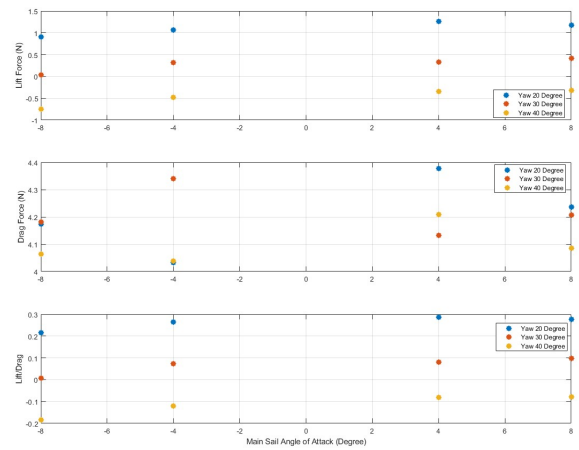

FIGURE 8: Design 1 Wind Tunnel Test Results at 1 PSF

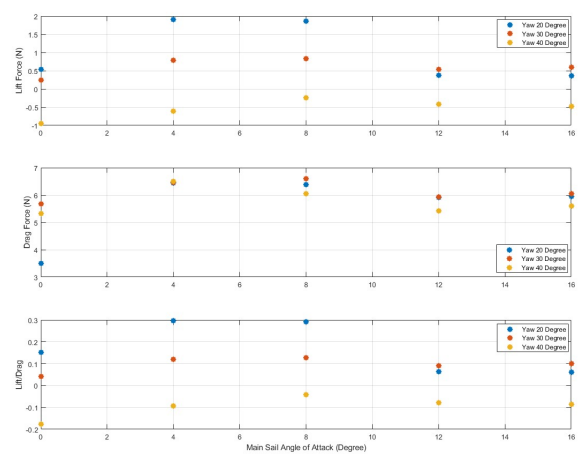

FIGURE 9: Design 1 Wind Tunnel Test Results at 1.5 PSF

3.3. Design 2: Lift and Drag Force Behavior

The lift and drag force measurements (shown in Fig. 10 and Fig. 11) for Design 2 show clear changes in aerodynamic

Copyright ©2026 by ASME

behavior compared to the baseline design. Across the tested operating conditions, Design 2 consistently generates higher lift forces. The increase in lift is observed at both wind speed and all rover yaw conditions. This indicates that the aerodynamic modifications introduced in Design 2 improve the effectiveness of the sails over a wide range of operating conditions.

In addition to improved lift generation, Design 2 shows a significant reduction in drag force relative to Design 1. The decrease in drag is attributed primarily to the redesigned traction hoop, which replaces the solid traction hoop used in Design 1 with a segmented three-ring design. This change reduces unnecessary frontal area.

The force measurements also suggest that the flow field around main sail and jib sail is less disturbed in Design 2. The segmented traction hoop allows cleaner flow to reach the sail surfaces, enhancing their effectiveness. As a result, the sails in Design 2 operate more efficiently, especially at rover smaller rover heading.

Overall the lift and drag trends observed for Design 2 indicate a substantial improvement in aerodynamic performance. The combined increase in lift and decrease in drag lead to higher lift-to-drag ratio, which is a critical requirement for achieving sustained upwind motion. These observations motivate the selection of Design 2 for subsequent aerodynamic coefficient identification and dynamic modeling efforts.

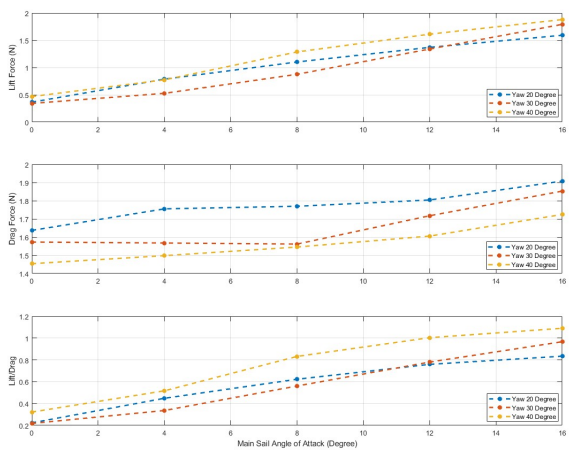

FIGURE 10: Design 2 Wind Tunnel Test Results at 1 PSF

3.4. Comparison Between Design 1 & Design 2

When lift and drag force results are compared for Design 1 and Design 2, a clear qualitative difference between the two designs emerges. Design 2 consistently produce higher lift forces while keeping the drag lower than that of Design 1. These clearly indicates that the design change from Design 1 to Design 2 clearly improvised aerodynamic performance.

Beyond the observed force improvements, Design 2 incorporates a segmented three-ring traction hoop design that more closely represent the intended final rover configuration. In contrast, the solid traction hoop used in Design 1 was primarily intended for early-stage testing and does not reflect the geometry planned for continued development. The segmented design reduces flow obstruction and provides a more realistic representation of the aerodynamic interactions expected in the final prototype.

Based on both the improved aerodynamic force behavior and the greater design relevance of the traction hoop configuration, subsequent aerodynamic coefficient identification and modeling efforts are focused exclusively on Design 2. Design 1 therefore serves as a reference configuration for comparison, while Design 2 forms the basis for the aerodynamic models developed in the remainder of this work.

4. AERODYNAMIC COEFFICIENT MODELING AND IDENTIFICATION

The purpose of this section is to introduce the aerodynamic coefficients identified for different parts of SSailOR. Also, this section clarifies how these coefficients are defined and derived. These definitions provide the foundation for the coefficient identification process and further the identification methods.

4.1. Background of Aerodynamic Coefficients

Aerodynamic forces acting on the SSailOR are described using lift and drag coefficients defined with respect to the freestream wind and reference areas. These coefficients provide a compact and scalable representation of aerodynamic behavior and allow direct incorporation of experimentally measured forces into the rover's dynamic model.

For the lifting surfaces, main sail and jib sail, aerodynamic forces are expressed using conventional lift and drag formulation. Lift and drag forces are written in non-dimensional form as functions of air density, freestream wind speed, and an appropriate reference area. For each sail, the reference areas are corresponds to the respective sail planform area. The lift coefficient primarily captures the dependence of aerodynamic force on sail angle of attack. And drag coefficient accounts for both parasitic and induced drag contributions.

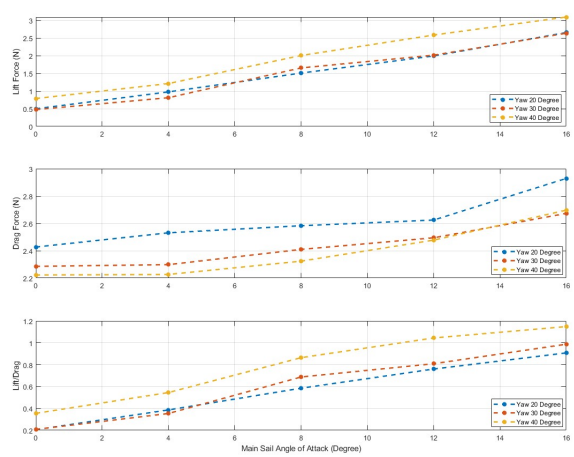

FIGURE 11: Design 2 Wind Tunnel Test Results at 1.5 PSF

Copyright ©2026 by ASME

Non-lifting components contribute significantly to the overall aerodynamic drag on the rover. These components include hull, traction hoop, ribs and side plates. The associated drag coefficients for these components have been identified using the residual drag forces on the rover. For non-lifting components, drag is modeled using direction dependent drag coefficients defined in rover body-fixed reference frame. Instead of single scalar drag coefficient, separate drag coefficients are introduced along the principal body axes. This approach accounts for the fact that the projected frontal area and flow interaction of the rover vary with rover orientation. The reference area for each drag component is taken as the projected frontal area on the respective body axes.

This vector form of drag representation is particularly important for SSailOR due to its asymmetric geometry and the strong dependence of drag on rover orientation observed during the wind tunnel testing. The use of direction dependent drag coefficient allow these orientation effect to be captured in a physically meaningful manner.

The aerodynamic coefficients defined in this section form the basis for the coefficient identification process described next.

4.2. Aerodynamic Coefficient Identification Process

The aerodynamic coefficients for the SSailOR were identified directly from the wind tunnel forces measurement using a sequential, data driven approach. The identification process was structured to identify the sail's lift coefficients and drag coefficients first and then identifying drag coefficients for other non-lifting parts. Force measured in all test conditions were used in the identification including variation of sail angle of attack, rover yaw, and wind speed.

The recorded dynamic pressure has been corrected for each test conditions to address the blockage from the rover model. The blockage correction was applied using the relation introduced by Barlow et al. [9] [10] which adjust the dynamic pressure as follows (Eq. (1)),

$$q_c = q_u \left(1 + \frac{1}{2}\frac{A_f}{A_t}\right) \tag{1}$$

where q_u is the recorded (uncorrected) dynamic pressure, q_c is the corrected dynamic pressure, and A_f/A_t is the fractional blockage due to rover prototype and mounting structure. This corrected pressure was used to normalize the measured aerodynamic forces and form the basis of coefficient identification.

$$q_c = \frac{1}{2}\rho V^2. \tag{2}$$

Lift coefficients for the main sail and jib sail were identified first using the lateral aerodynamic forces. The lift coefficients were expressed as 1st order polynomial in terms of angle of attack as expressed in Eq. (3).

$$C_L(\alpha) = b\,\alpha + c, \tag{3}$$

where α is sail angle of attack (in degrees), b & c are the constants identified from experimental data. The lift forces measured in the wind tunnel were normalized by the dynamic pressure q_c and sail reference area S_{ref_sail}. Further, a constrained linear least-square solver was used to estimate the lift coefficients. Bounds were applied to the coefficients to keep the identified value within reasonable range.

Once the lift coefficients for main sail and jib sail were identified , associated drag coefficients were modeled using standard aerodynamic expressions [11][12] as shown in Eq. (4).

$$C_D = C_{D,0} + \frac{C_L^2}{\pi AR\, e} \tag{4}$$

where, $C_{D,0}$ is zero-lift drag coefficient for sail, C_L is lift coefficient, AR is respective sail aspect ratio, and e is respective Oswald efficiency. The zero lift drag coefficient was estimated for low aspect ratio wings and respective Oswald efficiency was estimated by Weissinger method for coupled sails.

The derived sail drag coefficients are used further for drag force calculation on main sail and jib sail. Also, drag associated with the hull was treated separately. The hull geometry which consist of a spherical arc section, has comparatively well established drag coefficient. This approach reduced the total number of unknown parameters and simplified the subsequent identification process for other parts.

Using the identified and approximated drag coefficients for sails and hull, the drag force was calculated only for these parts. After accounting for drag contributions from main sail, jib sail and hull, the remaining drag force was attributed to non-lifting components, including the traction hoop, ribs and side plates. This remaining drag was obtained by subtracting the modeled sail drag and hull drag from experimentally measured total drag force on the rover. To capture, the effect of rover orientation effects, drag for these components was modeled using a direction-dependent formulation in the rover body-fixed frame. Separate drag coefficients were defined along the axial (i_B) and lateral (j_B) body axes. The reference frames and axes are described in section 2.4.

In this formulation, for each non-lifting component projected areas and respective drag coefficients along body longitudinal and lateral axes were weighted using $cos^2\psi$ and $sin^2\psi$ terms to account for change in effective frontal area with yaw angle (ψ). A generic form for non-lifting device drag is expressed in Eq. 5 [13] [14] [15].

$$\mathbf{D} = q_c * (A_i C_{D_i} \cos^2\psi + A_j C_{D_j} \sin^2\psi), \tag{5}$$

where, A_i and A_j are the frontal area in body axes i_B and j_B with drag coefficient C_{D_i} and C_{D_j} in the respective body axes. These drag coefficients were identified for non-lifting device such as traction hoop, ribs and side plates.

Identification of the drag coefficients for the non-lifting parts was done by a constrained linear least-square solver. Earlier attempts using unconstrained matrix inversion led to non-physical coefficient values, motivating the use of constrained optimization to enforce physically meaningful bounds. The constrained formulation improved numerical robustness and produced consistent coefficient values across the full set of test conditions.

The present identification approach is intentionally kept simple and procedural, relying on linear least squares formulations

Copyright ©2026 by ASME

with physically motivated constraints. More advanced solvers and alternative identification strategies are being explored and will be published in the future.

5. RESULTS

5.1. Identified Aerodynamic Coefficients

Table 4 summarizes the lift and drag coefficients for the main and jib sails. In this table α_{main} and α_{jib} are expressed in degrees. The identified lift coefficients shows that both sails will have non-zero C_L at Zero angle of attack (AOA). This is due to the underlying assumption which takes no contributions from non-lifting parts on the lateral forces. But in reality, non-lifting components will have small contribution in lateral direction forces due to their asymmetric shape.

TABLE 4: Sail's Identified Lift & Drag Coefficient

	C_L	C_D
Main Sail	$0.047\,\alpha_{main} + 0.063$	$0.06 + \frac{(C_{L_main})^2}{\pi * 2.10 * 0.69}$
Jib Sail	$0.019\,\alpha_{jib} + 0.091$	$0.06 + \frac{(C_{L_jib})^2}{\pi * 2.41 * 0.69}$

Table 5 summarizes the identified drag coefficients of non-lifting components along the body-fixed i_B and j_B axes.

TABLE 5: Drag Coefficients for Non-lifting Components

	C_{D_i} (along i_B)	C_{D_j} (along j_B)
Traction Hoop	0.772	0.315
Ribs	0.751	0.340
Side Plate	0.957	0.389
Hull	0.600	0.600

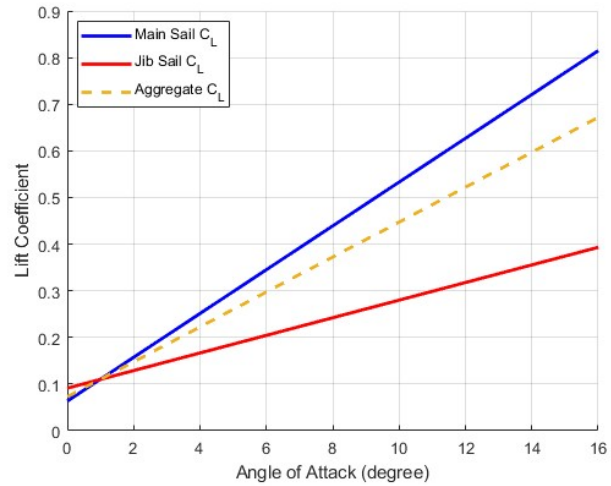

FIGURE 12: Main-Sail & Jib-Sail Lift Coefficient vs AOA

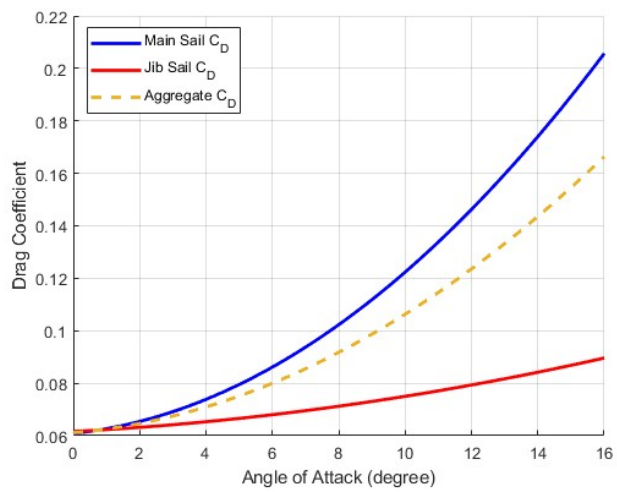

FIGURE 13: Main-Sail & Jib-Sail Drag Coefficient vs AOA

5.2. Validation and Comparison

This subsection examines how well the identified aerodynamic coefficients reproduce the lift and drag forces measured during wind tunnel experiments for Design 2. Predicted force were computed using the identified coefficient and evaluated at the same wind tunnel corrected wind speed, sails angle of attack, rover yaw, etc as the experimental tests. The comparison is intended to be qualitative and focuses on agreement in trends rather than exact numerical matching.

The validation is first considered at the coefficient level. Fig. 12 and Fig. 13 show the lift and drag coefficients for the main sail and jib sail as functions of angle of attack (in degree). Over the tested range, the lift coefficients vary linearly with angle of attack, consistent with the assumption made in the identification process. The corresponding drag coefficients increase with angle of attack due to the induced drag contribution associated with lift generation. These trends indicate that the identified coefficients behave reasonably within the range of conditions tested in wind tunnel.

Force level validation is then performed by directly comparing predicted and experimental forces (shown in Fig. 14). Fig. 15 shows predicted and measured lift forces as function of main sail angle of attack for rover yaw angles of 20° , 30° and 40°. For each yaw angle, the predicted lift follows the same overall trend as the experimental data. While the predicted values do not match the measurements exactly, particularly at higher angle of attack, the model consistently captures how lift varies with sail angle of attack and rover yaw.

A similar comparison for drag force is shown in Fig. 16. The predicted drag increases with sail angle of attack and wind speed, in agreement with the experimental observations. The plot shows strong agreement in experiment drag and predicted drag for most of the cases. In particular, lateral aerodynamic forces are assumed to be generated primarily by the main sail and jib sail, whereas in reality additional lateral forces will be generated by non-lifting components due to their asymmetric shapes along the body principle axes.

Overall, the identified aerodynamic coefficients capture the

Copyright ©2026 by ASME

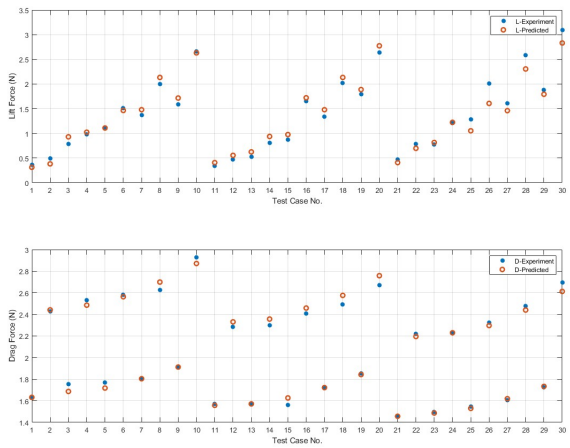

FIGURE 14: Comparison between Predicted & Experimental Forces for all test cases

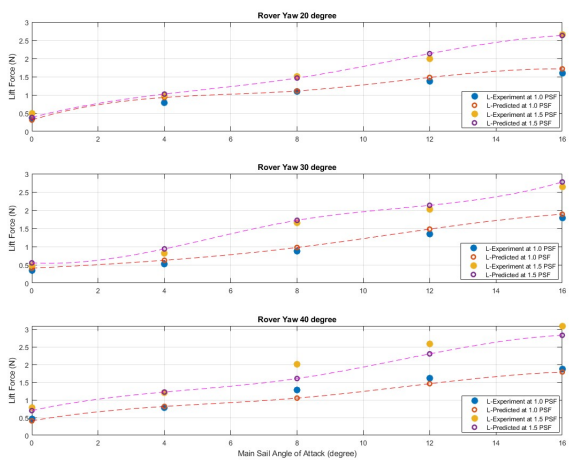

FIGURE 15: Comparison of Predicted Lift & Experiment Lift

dominant lift and drag trends observed in the wind tunnel experiments for Design 2. Despite offset in drag magnitude, the level of agreement is sufficient for dynamic modeling and control development, where reproducing trends and relative force variations is more important than exact point-wise agreement. The remaining discrepancies point to areas where the aerodynamic model can be refined in the future work, particularly in the treatment of drag contributions from non-lifting components. The future study will involve flow study, coupled aerodynamic effects, stall behavior of sails, ANSYS simulations.

6. CONCLUSION

This paper presented an experimental aerodynamic characterization of the Spherical Sailing Omnidirectional Rover (SSailOR) based on wind tunnel testing and aerodynamic coefficient identification. Two design variants were evaluated experimentally, with Design 1 serving as a baseline and Design 2 incorporating aerodynamic refinements to the sail designing, traction hoop, rib and hull geometry. Wind tunnel force measurements demonstrated clear improvements in lift generation and drag reduction for Design 2, motivating its selection for detailed aerodynamic modeling.

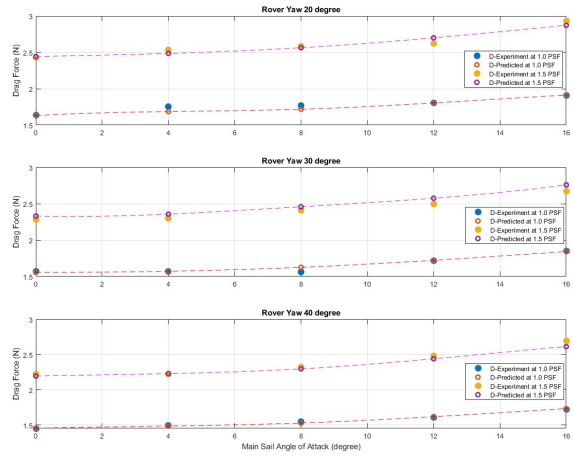

FIGURE 16: Comparison of Predicted Drag & Experiment Drag

Aerodynamic coefficients for Design 2 were identified for both lifting and non-lifting components using experimental force data. Lift coefficients and drag coefficients were identified for the main sail and jib sail, while direction-dependent drag coefficients were identified for non-lifting components to account for asymmetric loading with rover yaw. The identified coefficients were used to predict lift and drag forces under the same operating conditions as the wind tunnel experiments. Comparison between predicted and measured force showed that the identified models capture the dominant trends across sail angle of attack, rover yaw, and wind speed, with reasonable agreement suitable for system-level analysis.

The resulting aerodynamic coefficients provide a reusable and physically grounded representation of SSailOR's aerodynamic behavior and enable the development of high-fidelity dynamic models. Analysis based on the identified lift-to-drag characteristics indicates that the aerodynamic performance of Design 2 is sufficient to support net upwind motion, consistent with the intended operating concept of the rover. These results establish a foundation for ongoing dynamic modeling and control design efforts.

Future work will focus on incorporating the identified coefficients into full dynamic simulation framework, refining the treatment of lateral aerodynamic forces contributed by non-lifting components, and extending the analysis to closed-loop control development. Additional experimental validation through full scale rover prototyping and outdoor testing is planned as a next step towards demonstrating sustained upwind mobility in field environments.

ACKNOWLEDGMENTS

This work was supported by the National Science Foundation under NSF-FRR Grant No. 2348361. The authors gratefully acknowledge the use of the subsonic wind tunnel facility at North

Copyright ©2026 by ASME

Carolina State University for conducting the experimental studies presented in this paper.

The authors also thank Dr. Ashok Gopalarathnam for insightful discussion that contributed to the aerodynamic design refinement leading from Design 1 to Design 2.

REFERENCES

[1] Landis, Geoffrey A, Oleson, Steven R and Grantier, David. "Zephyr: A landsailing rover for venus." *International Astronautical Congress*. GRC-E-DAA-TN17880. 2014.

[2] Wilson, Jamie, Mazzoleni, Andre, Dejarnette, Fred, Antol, Jeffrey, Hajos, Gregory and Strickland, Christopher. "Design, Analysis, and Testing of Mars Tumbleweed Rover Concepts." *Journal of Spacecraft and Rockets* Vol. 45 (2008): pp. 370–382. DOI 10.2514/1.31288.

[3] Hartl, Alexandre E and Mazzoleni, Andre P. "Parametric study of spherical rovers crossing a valley." *Journal of guidance, control, and dynamics* Vol. 31 No. 3 (2008): pp. 775–779.

[4] Hartl, Alexandre E and Mazzoleni, Andre P. "Dynamic modeling of a wind-driven tumbleweed rover including atmospheric effects." *Journal of Spacecraft and Rockets* Vol. 47 No. 3 (2010): pp. 493–502.

[5] Mazzoleni, Andre and Hartl, Alexandre. "Terrain Modeling and Simulation of a Tumbleweed Rover Traversing Martian Rock Fields." *Journal of Spacecraft and Rockets* Vol. 49 (2012): pp. 401–412. DOI 10.2514/1.57903.

[6] Carrion, George, Shah, Parin, Varanwal, Aditya, Vermillion, Chris and Mazzoleni, Andre P. "CFD Analysis and Experimental Validation of the Aerodynamic Forces Acting on the Spherical Sailing Omnidirectional Rover (SSailOR)." (2026). Submitted to the ASME Fluids Engineering Division Summer Meeting (FEDSM 2026), Paper No. FEDSM2026-184435.

[7] Kosak, Harrison, Fine, Jacob, Varanwal, Aditya, Ortenburg, Ashley, Ramirez-Gomez, Diego, Shah, Parin, Carrion, George, Mazzoleni, Andre and Vermillion, Christopher. "Modeling, Control, and Closed-Loop Mobility Characterization of a Spherical Sailing Omnidirectional Rover (SSailOR)." *Journal of Dynamic Systems, Measurement, and Control* (2026): pp. 1–13DOI 10.1115/1.4070774. URL https://asmedigitalcollection.asme.org/dynamicsystems/article-pdf/doi/10.1115/1.4070774/7582717/ds-25-1221.pdf, URL https://doi.org/10.1115/1.4070774.

[8] Varanwal, Aditya, Shah, Parin, Carrion, George, Ortenburg, Ashley, Ramirez-Gomez, Diego, Vermillion, Chris and Mazzoleni, Andre P. "Sspherical sailing omnidirectional rover (SSailOR): wind tunnel experimental setup and results." (2025). URL 2508.12443, URL https://arxiv.org/abs/2508.12443.

[9] Chen, Wei-Han and Rauleder, Juergen. "Unsteady Loads of a Scaled Rotor on and near the Landing Deck of the NATO Generic Destroyer with Concurrent Stereo PIV and Surface Pressure Measurements." 2024. DOI 10.4050/F-0080-2024-1063.

[10] Barlow, Jewel B., Rae, William H. and Pope, Alan. *Low-Speed Wind Tunnel Testing*. John Wiley & Sons, New York, NY (1999).

[11] Anderson, John D. *Fundamentals of Aerodynamics*, 6th ed. McGraw-Hill Education, New York, NY (2017).

[12] Hoerner, Sighard F. *Fluid-Dynamic Drag*. Hoerner Fluid Dynamics, Bakersfield, CA (1965).

[13] Beknalkar, Sumedh, Bryant, Matthew, Darbha, Swaroop and Mazzoleni, Andre. "Underwater Dynamics, Controls and Trajectory Tracking of an Amphibious Screw-propelled Vehicle for Arctic Exploration." *2024 IEEE International Conference on Advanced Intelligent Mechatronics (AIM)*: pp. 1353–1358. 2024. DOI 10.1109/AIM55361.2024.10636975.

[14] Beknalkar, Sumedh, Bishop, Riley, Bryant, Matthew and Mazzoleni, Andre. "Demonstration and Dynamic Model Validation of Underwater Locomotion of a Submersible Screw-Propelled Vehicle." *OCEANS 2024 - Halifax*: pp. 1–8. 2024. DOI 10.1109/OCEANS55160.2024.10754375.

[15] Tarn, Tzyh Jong, Shoults, GA and Yang, SP. "A dynamic model of an underwater vehicle with a robotic manipulator using Kane's method." *Autonomous robots* Vol. 3 No. 2 (1996): pp. 269–283.

Copyright ©2026 by ASME