Proceedings of the ASME 2026
Fluid Engineering Division Summer Meeting
FEDSM2026
July 26–29, 2026, Bellevue, WA, USA

FEDSM2026-184435

CFD ANALYSIS AND EXPERIMENTAL VALIDATION OF THE AERODYNAMIC FORCES ACTING ON THE SPHERICAL SAILING OMNIDIRECTIONAL ROVER (SSAILOR)

George Carrion*[1,*], Parin Shah*[1], Aditya Varanwal[1], Chris Vermillion[2], Andre P. Mazzoleni[1]

[1]North Carolina State University, Raleigh, NC, USA
[2]University of Michigan, Ann Arbor, MI, USA

ABSTRACT

The Spherical Sailing Omnidirectional Rover (SSailOR) is an ongoing project to design a wind-powered, autonomous rover capable of upwind motion via lift propulsion from its sails. Design optimization is a methodology used in engineering to achieve a desired solution. It is an approach that undergoes theoretical and real-world testing before a final design is determined. In aerospace applications, designs are evaluated for their aerodynamic characteristics using computational fluid dynamics (CFD) simulations and verified through wind tunnel testing. A straightforward comparison between the two analysis methods is critical for accurately assessing SSailOR's aerodynamic performance for future design improvisations and optimization to minimize the cost for conducting wind tunnel testing.

The following paper presents CFD analyses of lift and drag forces for the SSailOR prototype using ANSYS Fluent for various conditions. Further, experimental tests were conducted in a subsonic wind tunnel at North Carolina State University. A six-component load sensor was used to record force vector and moments along three axes. Testing for each configuration included varying the sail angle, rover rotation rate, rover heading angle, and wind speed. CFD and Wind tunnel results are shown separately, then shown together for comparison, with an accompanying discussion.

The results identify areas for improving the rover and outline steps for future rover designs.

Keywords: CFD simulation, Wind Tunnel, Force measurement, Spherical Rover Aerodynamics, Lift-Based Wind Propulsion, SSailOR

NOMENCLATURE

Roman letters

D	Aerodynamic drag force [N]
L	Aerodynamic lift force [N]
Q	Dynamic pressure, $Q = \frac{1}{2}\rho V^2$ [PSF]
V_∞	Freestream wind speed [m s^{-1}]

Greek letters

α	Angle of attack [deg]
α_M	Main sail angle of attack [deg]
α_J	Jib sail angle of attack [deg]
ρ	Air density [kg m^{-3}]

1. INTRODUCTION

1.1. Background

Rovers have become a subject of innovation for their ability to survey or explore difficult-to-reach or uninhabited areas. Inspiration from life has guided the design of some of the said rovers. The tumbleweed, as seen in real life, can be carried over large distances by the wind and is a perfect source of inspiration for a rover concept. What makes a tumbleweed like rover useful is how it solely relies on wind for propulsion rather than expending energy. Past designs for a tumbleweed rover have been developed. Tumbleweed rovers in [1], [2], [3], and [4] are designed to be propelled with drag. While energy efficient, the issue with drag-based propulsion comes from limitations of controllabillity and upwind motion. In contrast, the Land-Sailing Rover [5] is propelled by lift and can travel upwind. However, this design will fail in gusty conditions. The comparison and tradeoffs considered for current designs are expanded in [6]. From this literature-review, a new concept for a spherical rover has been proposed and is being developed.

1.2. Purpose

The Spherical Sailing Omnidirectional Rover (SSailOR) is a wind-powered autonomous rover, motivated by the growing need for persistent and sustainable robotic systems to operate in remote environments. The SSailOR is the first wind-powered spherical

*Corresponding author: gmcarrio@ncsu.edu
*These authors contributed equally to this work.

Copyright ©2026 by ASME

rover capable of net upwind motion. This is a spherical terrestrial rover, inspired by the sailboat, with a centerboard equivalent and lifting sails. Its traction hoop serves as the centerboard, enabling movement on the given terrain. Long-duration mobility is enabled by wind propulsion via onboard sails. These sails are controllable for desired paths, including upwind motion. Potential applications for this concept are wide, including planetary exploration, arctic observation, and military surveillance. This rover is to have a design that generates lift with minimal energy consumption. This is a unique concept, which makes it complex and requires a well-designed rover.

The rover model used in this comparative study is an improved design from baseline design [7]. As seen in Fig 1, the design includes main-sails (1), jib-sail (5), traction hoop (3), curved ribs (2), side plates (4), and an inner hull (7). The traction hoop (3) is made of an assembly of rings and simple connectors. The ribs are used to connect the traction hoop to the side plates. Each of these rib types has a circular cross-section to streamline it and a rectangular T-profile at end for a strong, stiff connection. An inner rod connects the outer shell to the inner hull, with two additional curved circular ribs for more contact with the sail surface areas. NACA 0020 airfoil has been used to design main sail and jib sail.

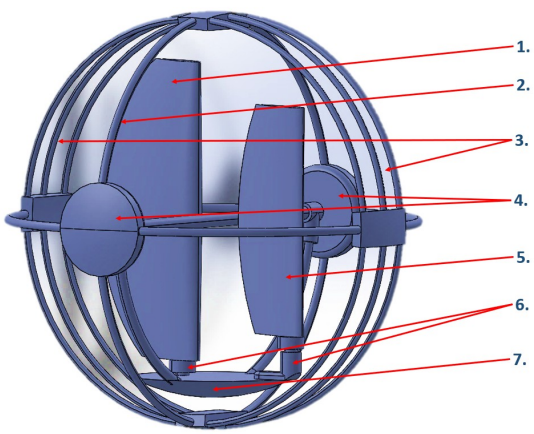

FIGURE 1: Rover Design

In aerospace applications, designs are proven for aerodynamic behavior with computational fluid dynamics (CFD) simulations and wind tunnel testing. CFD is preferred as a cheaper, more straightforward, yet reputable alternative to field testing. CFD calculates and visualizes the flow of a test subject using the governing equations of fluid dynamics. CFD, while useful, may not account for real-world abnormalities. Wind tunnel testing provides a close-to-real-world scenario for the design being tested. As a common strategy [8], CFD provides insight that can be applied to wind tunnel testing, enabling testing with a real prototype. However, both methods may introduce errors, whether due to design simplifications or unseen disturbances and boundary-layer effects in the test area. As a result, these methods are practiced in tandem. A straightforward comparison between the two analysis methods is critical for accurately assessing SSailOR's aerodynamic performance. This paper considers the design validation of the Spherical Sailing Omnidirectional Rover (SSailOR) through wind tunnel experiments and ANSYS CFD simulations.

1.3. Direction of study

For this general study and comparison, testing was conducted to reflect the rover across a wide range of operable conditions. These tests considered variation of the rover's yaw position ψ, sail angle of attack α_M and α_J, wind speed V_∞ (in terms of dynamic pressure Q), and cage rotational speed RPM. The main sail angles were extended beyond its stall angle to figure how the rest of the rover may effect it. CFD simulations were made in parallel with the wind tunnel experiments. Each test method followed the same test matrix, created from the variables in table 1. The aerodynamic forces measured are lift (L) and drag (D). Lift is the force perpendicular to the freestream wind while drag is parallel to it.

TABLE 1: Test Variables With Varying Jib

Parameter	Values Tested	Units
Test configurations per design	30	–
Rover heading (yaw)	20, 30, 40	degree
Main sail angle of attack	0 – 16	degree
Jib sail angle of attack	0 – 18	degree
Freestream wind speed	9.178, 11.241	m/s
Reynolds number	$1.5\times10^5 - 2.5\times10^5$	–

2. CFD STUDY

2.1. Methodology

ANSYS Fluent was utilized for this study, as it is a well-known computer software in the professional aerospace field. ANSYS Fluent is a solver that follows the Navier-Stokes equations for simulations [9] [10] [11]. The Navier-Stokes equations Eqs. (1), (2), (3), and (4) are partial differential equations that, with Newton's second law applied, describe the motion of viscous fluids. The K-epsilon model is used in standard wind tunnel testing for low-turbulence conditions.

$$\frac{\partial \rho}{\partial t} + \frac{\partial(\rho u_k)}{\partial x_k} = 0 \tag{1}$$

$$\rho\frac{Du_i}{Dt} = -\frac{\partial p}{\partial x_i} + \mu\nabla^2 u_i + \rho f_{b,i} \tag{2}$$

$$\frac{Dk}{Dt} = \frac{\partial}{\partial x_j}\left(\nu_t \frac{1}{\sigma_k}\frac{\partial k}{\partial x_j}\right) + \nu_t \frac{\partial u_i}{\partial x_j}\left(\frac{\partial u_i}{\partial x_j} + \frac{\partial u_j}{\partial x_i}\right) - \varepsilon \tag{3}$$

$$\frac{D\varepsilon}{Dt} = \frac{\partial}{\partial x_j}\left(\nu_t \frac{1}{\sigma_\varepsilon}\frac{\partial \varepsilon}{\partial x_j}\right) + C_1\nu_t \frac{\varepsilon}{k}\frac{\partial u_i}{\partial x_j}\left(\frac{\partial u_i}{\partial x_j} + \frac{\partial u_j}{\partial x_i}\right) - C_2\frac{\varepsilon^2}{k} \tag{4}$$

This software is capable of studying static and dynamic fluid motion. In this case, a static study is the focus, while a more realistic dynamic analysis is in progress. The CFD simulations are comparable with the wind tunnel setup, with the exact wind tunnel dimensions and the same rover scale. The simulation is

Copyright ©2026 by ASME

configured with two boundaries: one for the wind tunnel environment and the other for the rover. The simulations disregard the motion of the traction hoop. The simulation portal is set to two different wind speeds used in the real wind tunnel. Unlike the wind tunnel experiment, the speeds in Table 1 were entered into the simulation software as velocity, temperature, and density.

2.2. Model

For the CFD simulation, the model mainly reflected the real rover Fig.2. Changes made to make it compatible with the simulation solver included removing non-manifold geometries, filling in screw holes, changing the side plates for a smoother transition to side ribs, and traction hoop connectors to cover overextended troubling geometry. The changes result in the model shown in Fig.3.

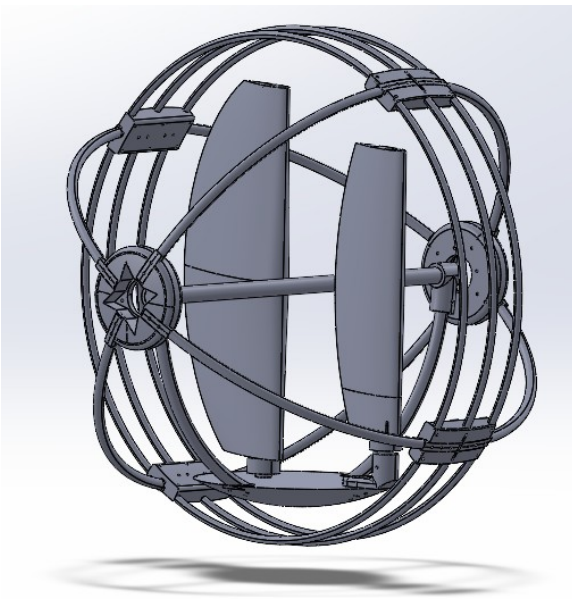

FIGURE 2: Rover Actual CAD

2.3. Mesh Study

The simulation mesh varied throughout the rover's structure. Literature review follows that the mesh size should be minimal at points of interest and coarser farther away [9]. A higher resolution gives better accuracy of fluid dynamic properties in the simulation [12]. For each sail, such as shown in Fig.5, the mesh elements followed common practice where it was tightest at the leading edge and then low dense at the trailing edge of sails, similarly shown in [13]. The mesh for other components of the rover followed a similar size and quality. The rectangular brackets, refer to Fig.6, where the circular rods of the shell meet up, had a denser mesh around connection points. The mesh around the side hub is shown in Fig.7, which follows the same trend as the traction hoop bracket. The mesh bunched up around the rover components and spread farther into the empty atmosphere, with lower-dense mesh. These simulations had an unstructured mesh, and as a consequence, overshoot with the NACA airfoil was expected [14].

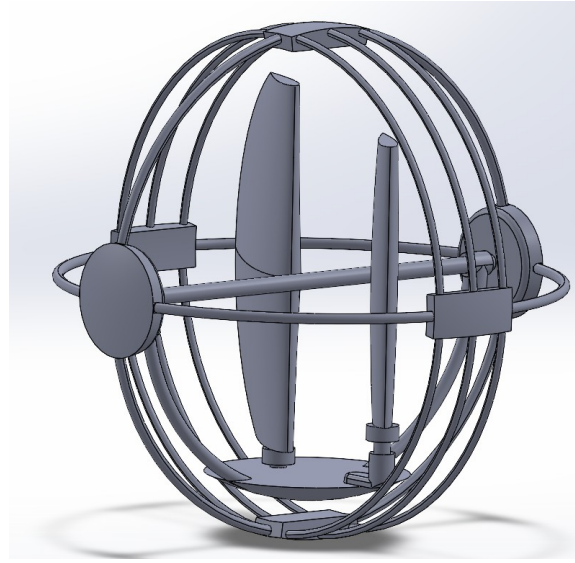

FIGURE 3: Rover CAD with Simplification

The focus of these simulations was finding improved aerodynamic performance. CFD simulations with an unstructured mesh were run for the original baseline design and forces correlated similarly to the wind tunnel experiments of the baseline design.

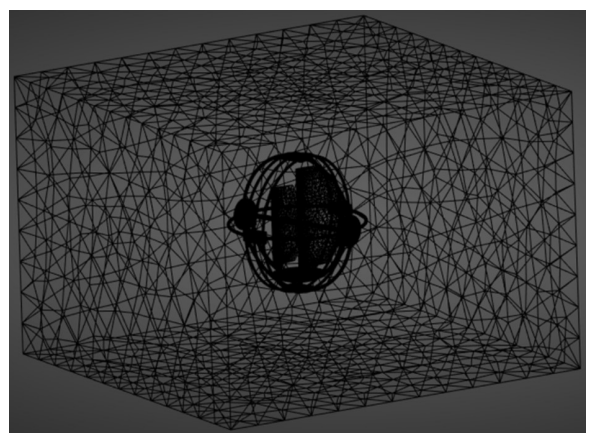

FIGURE 4: CFD Rover Setup

2.4. Results

The results from the CFD simulations are shown in Fig.8 and Fig.9, correlate with the trends observed for common finite-wings [15] [16] [17]. The lift force increases with main-sail angle of attack until it reaches the stall region, after which it decreases. Drag gradually increases with the main-sail angle of attack. A trend line is included to facilitate the distinction between lift and drag forces. If more sail positions were simulated, these trends would be much smoother. Across the different configurations, the drag doesn't climb up as fast approaching the stall. The drag's behavior of a near horizontal line comes from additional drag of the structure. Figure.8 shows that for a lower wind speed and larger yaw angles, a longer period was obtained where the lift force overtook the drag force. Figure.8 shows that, for a 30-degree yaw angle, the stall angle is approximately 12-14 degrees

Copyright ©2026 by ASME

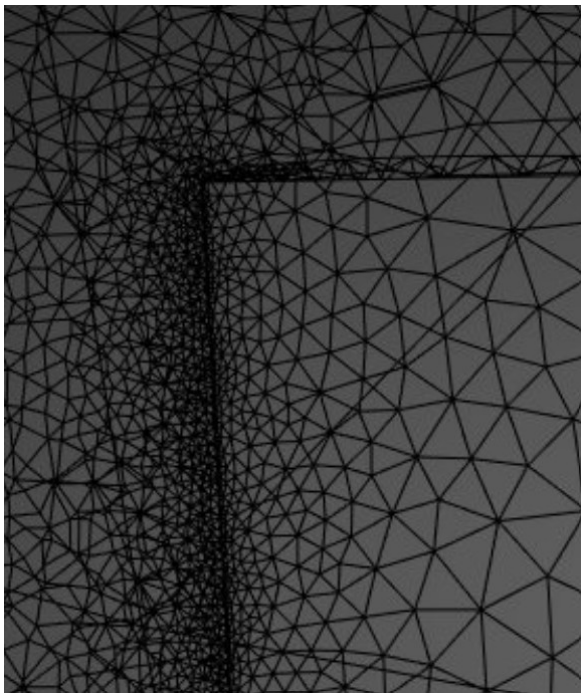

FIGURE 5: Main Sail Leading Edge Mesh

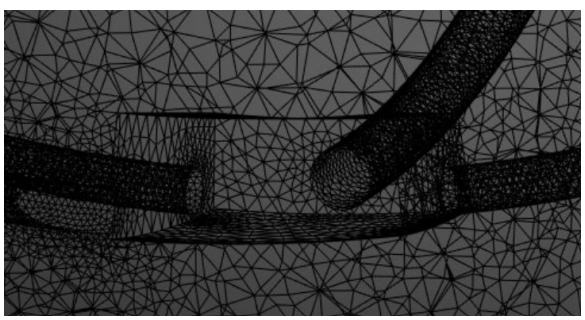

FIGURE 6: Traction Hoop Connector Mesh

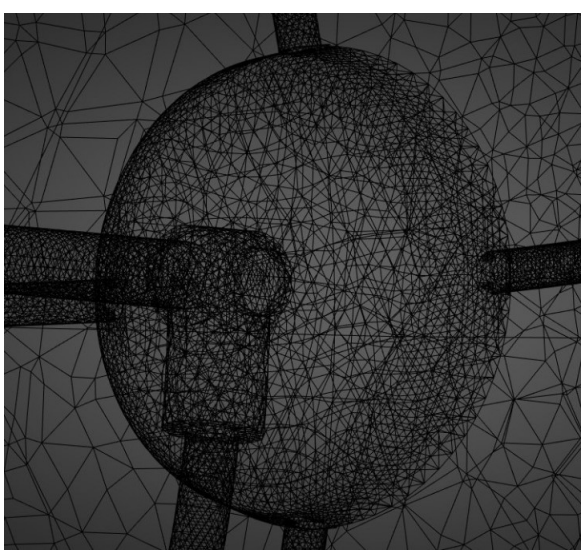

FIGURE 7: Side Plate Mesh

for the main sail. If the position of the main sail was extended further, a stall angle would eventually be observed in the other cases. However, as seen in different studies, such as [18], using the NACA 0020 foil, the stall angle occurs between 10 and 12 degrees. Disregarding the rest of the rover's structure, the yaw direction, disturbances caused by the rover shell, but specifically the jib can effect and delay stall.

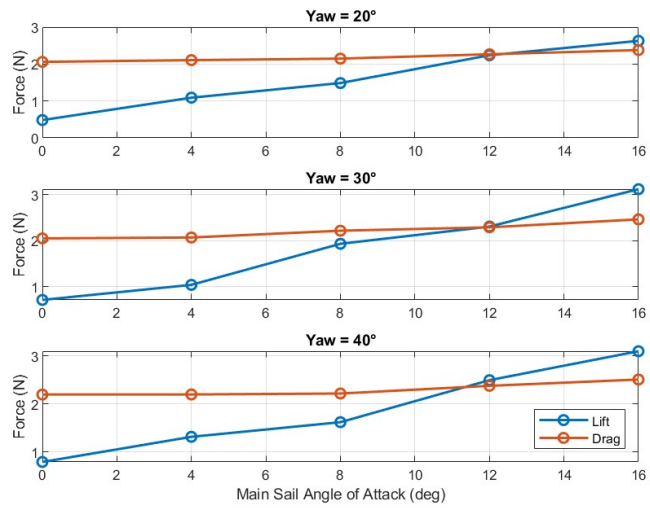

FIGURE 8: Simulation at 1 PSF

3. WIND TUNNEL EXPERIMENT

3.1. Brief of Test Setup

Wind tunnel tests were conducted in the subsonic wind tunnel at North Carolina State University. The Wind tunnel tests included a scaled rover and a test structure to keep it in place, Fig.10. Due to constraints on the wind tunnel testing section and cross-section blockage, a 0.4 scale, 40 cm-diameter SSailOR rover was used. The test structure consisted of an upper test mount and a lower mount. This structure was designed for ease of reconfiguration and assembly/disassembly. The setup and experiment is further explained in [6].

The upper test mount was put in the wind tunnel testing section. The provided wind tunnel had a test section of 32 x 45 x 46 inches and was, as a consequence, designed for this deliverable. A stepper motor was employed along the side of the structure to rotate the rover's spherical cage to simulate movement over terrain. Flow disturbances by the structure to the rover were considered. Fairings, including symmetrical and elliptical airfoils, were attached to the sides and bottom of the mount to streamline it and further support the frame. Other sources of flow disturbance from the tunnel wall and floor were managed by following standard wind tunnel practices. Symmetry was maintained across the assembly region in the wind tunnel, with vertical fairings and a dummy motor. Not shown in Fig 10, between the upper and lower mount, is a six-axis load cell and a large stepper motor. The six-axis load cell was used to measure force and moment. The stepper motor was used to change the yaw angle of the entire setup. The provided wind tunnel at NCSU had installed pressure and temperature sensors. The sails

Copyright ©2026 by ASME

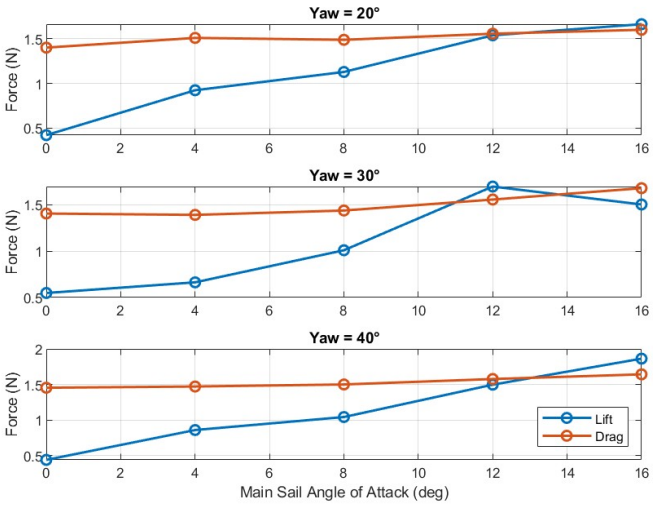

FIGURE 9: Simulation at 1.5 PSF

position were moved manually using a servo motor as per the test matrix. Data from each wind tunnel test and motor control was accomplished in LabVIEW [6].

3.2. Wind Tunnel Test Results

The wind tunnel results in Figures 11 and 12 show a trend which is commonly observed in finite-wings. Similar to presented results in CFD simulations, a trend-line was included to make the results more visible. The lift created by the rover is greater at the lower wind speed for all yaw positions tested. Lift overcame drag in both Fig.11 and Fig.12 at larger yaw angles. Stall region was clearly visible for α_M approximately 12 degrees at 30 degree yaw. Similarly, the rover approaches stall for α_M approximately 16 degrees at 20 degree yaw. Both phenomenon are shown in Fig.12.

4. COMPARISON OF CFD AND WIND TUNNEL

4.1. Plots and Observation

The comparison between CFD simulation results and wind tunnel testing is shown in Fig. 13 to Fig. 16.

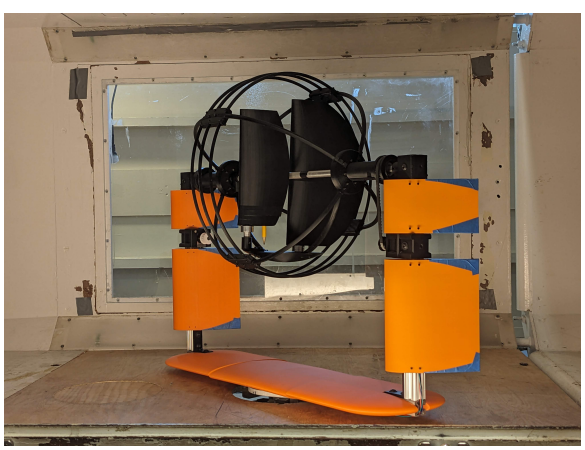

FIGURE 10: Wind Tunnel Test Setup

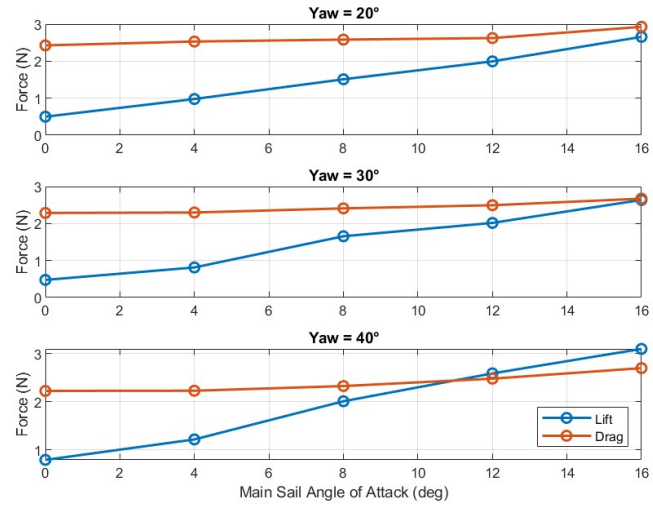

FIGURE 11: Wind Tunnel at 1 PSF

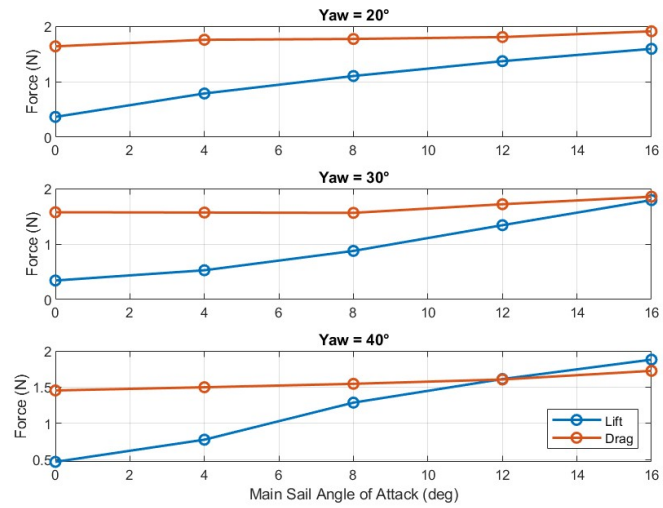

FIGURE 12: Wind Tunnel at 1.5 PSF

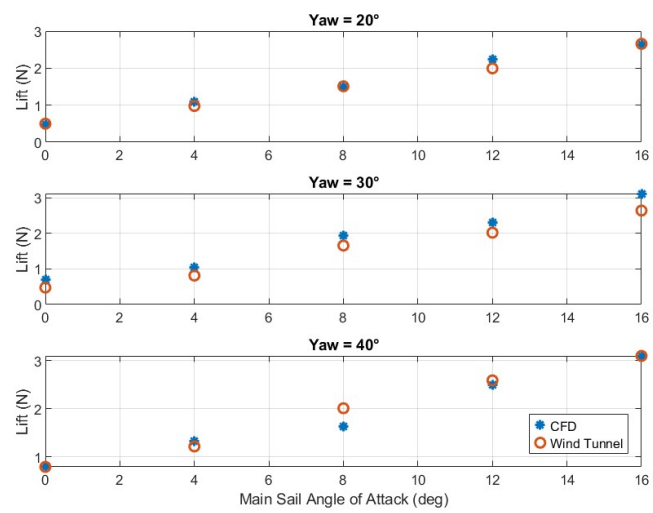

FIGURE 13: Lift Comparison @ 1 PSF

Copyright ©2026 by ASME

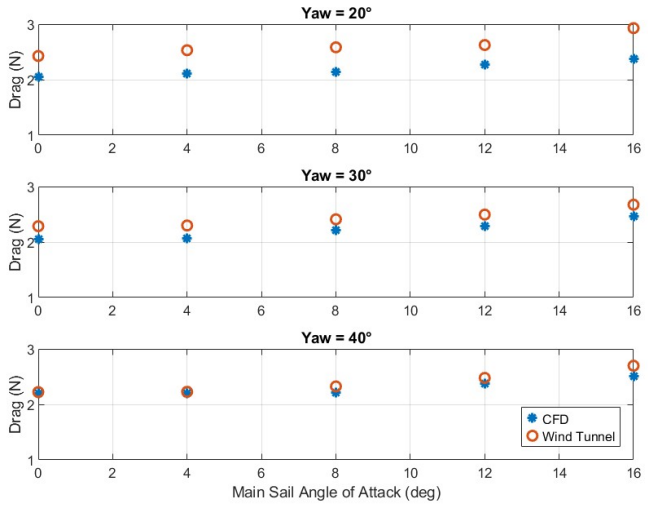

FIGURE 14: Drag Comparison @ 1 PSF

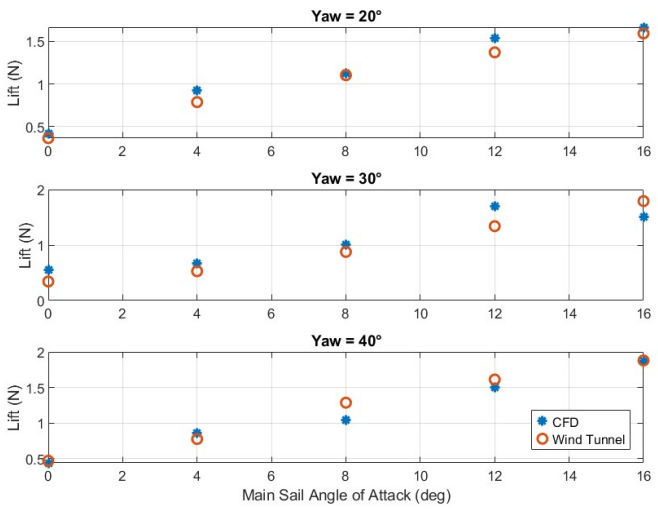

FIGURE 15: Lift Comparison @ 1.5 PSF

Figures 13 and 14 present the comparison of lift and drag forces at 1 PSF, while Figures 15 and 16 present respective results at 1.5 PSF. Lift and drag forces followed the similar trends in both i.e. CFD simulation and wind tunnel tests for mostly all test configurations. Across the results between the CFD simulations and wind tunnel, similarity gets closer at larger yaw angles and greater wind speeds.

In comparison, the largest difference in forces between both methods are seen in drag forces for both 1 psf Fig.14 and 1.5 psf Fig.16. The drag forces for the wind tunnel was more than the CFD simulations. The CFD simulations and wind tunnel drag forces are closest for 40 degree yaw, with the biggest difference occurring for the main sail at a 16 degree angle of attack. In total, across all yaw angles with wind speeds, the mean absolute error for lift and drag are 12 and 10 percent.

The lift for low and high main angles shows the greatest similarity. For a yaw at 40 degrees, Fig.14 and Fig.16 show a distinguishable difference at a 8 degrees main sail angle. Perhaps this sharp discrepancy comes from how the traction hoop is

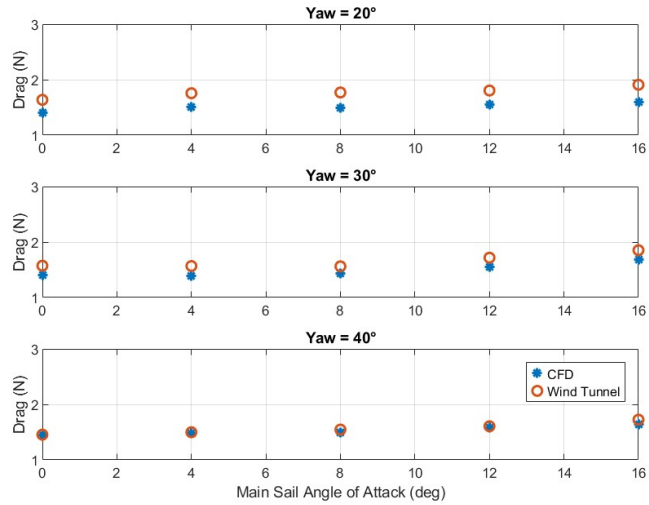

FIGURE 16: Drag Comparison @ 1.5 PSF

aligned in reference to the direction of the freestream wind? Unlike the drag forces, the simulated lift was often more than what was seen in the wind tunnel [14]. This relation was different for Fig.16 at 40 degree yaw with the main angles of 8 and 12 degrees.

4.2. Discussion

The methods show correlation but its errors can be identified for future mitigation. The origination of the errors proposed specifically focus in the CFD simulations. To start, some sort of error is contributed to how the simulation model doesn't match the one used in the wind tunnel experiment. Further, the simulations had an unstructured mesh, guaranteeing some sort of inaccuracy. As discussed in the CFD simulations, overshoot was expected. The wind tunnel experiment was compared to the CFD simulations with this expectation. This behavior was evident for the lift forces but the simulated drag had the opposite effect. This discrepancy mostly originates from how the traction hoop rotated in the wind tunnel, creating additional drag. Probably minimal, the wind tunnel operated during a period when conditions were such that even the changing atmosphere could cause a small difference in wind speed. Other factors contributing to inaccuracies in wind tunnel and CFD experiments are explained in the previously mentioned [8]. However, these last areas of error are difficult to quantify and are instead considered.

5. CONCLUSION

In conclusion, the SSailOR prototype was studied using CFD simulations and wind tunnel testing. Results found a correlation between the two methods, with the largest difference occurring for the drag force in most of the test cases, as shown in Fig.14 and Fig.16.

ACKNOWLEDGMENTS

This work was supported by the National Science Foundation under NSF-FRR Grant No. 2348361. The authors gratefully acknowledge the use of the subsonic wind tunnel facility at North Carolina State University for conducting the experimental studies presented in this paper.

Copyright ©2026 by ASME

REFERENCES

[1] Wilson, Jamie, Mazzoleni, Andre, Dejarnette, Fred, Antol, Jeffrey, Hajos, Gregory and Strickland, Christopher. "Design, Analysis, and Testing of Mars Tumbleweed Rover Concepts." *Journal of Spacecraft and Rockets* Vol. 45 (2008): pp. 370–382. DOI 10.2514/1.31288.

[2] Hartl, Alexandre E and Mazzoleni, Andre P. "Parametric study of spherical rovers crossing a valley." *Journal of guidance, control, and dynamics* Vol. 31 No. 3 (2008): pp. 775–779.

[3] Hartl, Alexandre E and Mazzoleni, Andre P. "Dynamic modeling of a wind-driven tumbleweed rover including atmospheric effects." *Journal of Spacecraft and Rockets* Vol. 47 No. 3 (2010): pp. 493–502.

[4] Mazzoleni, Andre and Hartl, Alexandre. "Terrain Modeling and Simulation of a Tumbleweed Rover Traversing Martian Rock Fields." *Journal of Spacecraft and Rockets* Vol. 49 (2012): pp. 401–412. DOI 10.2514/1.57903.

[5] Landis, Geoffrey A, Oleson, Steven R and Grantier, David. "Zephyr: A landsailing rover for venus." *International Astronautical Congress*. GRC-E-DAA-TN17880. 2014.

[6] Varanwal, Aditya, Shah, Parin, Carrion, George, Ortenburg, Ashley, Ramirez-Gomez, Diego, Vermillion, Chris and Mazzoleni, Andre P. "Aerodynamic Coefficient Identification for a Spherical Sailing Omnidirectional Rover (Ssailor) via Wind Tunnel Testing." (2026). Submitted to the ASME Fluids Engineering Division Summer Meeting (FEDSM 2026), Paper No. FEDSM2026-184261.

[7] Varanwal, Aditya, Shah, Parin, Carrion, George, Ortenburg, Ashley, Ramirez-Gomez, Diego, Vermillion, Chris and Mazzoleni, Andre P. "Sspherical sailing omnidirectional rover (SSailOR): wind tunnel experimental setup and results." (2025). URL 2508.12443, URL https://arxiv.org/abs/2508.12443.

[8] Fujii, Kozo. "Progress and future prospects of CFD in aerospace—Wind tunnel and beyond." *Progress in Aerospace Sciences* Vol. 41 No. 6 (2005): pp. 455–470. DOI https://doi.org/10.1016/j.paerosci.2005.09.001. URL https://www.sciencedirect.com/science/article/pii/S0376042105001016.

[9] *CFD Analysis and Wind Tunnel Testing of Human Powered Vehicle Drag Coefficients*, Vol. Volume 2: Fluid Applications and Systems; Fluid Measurement and Instrumentation of *Fluids Engineering Division Summer Meeting* (2021). DOI 10.1115/FEDSM2021-65393. URL https://asmedigitalcollection.asme.org/FEDSM/proceedings-pdf/FEDSM2021/85291/V002T03A017/6764915/v002t03a017-fedsm2021-65393.pdf, URL https://doi.org/10.1115/FEDSM2021-65393.

[10] Zawawi, Mohd Hafiz, Saleha, A, Salwa, A, Hassan, NH, Zahari, Nazirul Mubin, Ramli, Mohd Zakwan and Muda, Zakaria Che. "A review: Fundamentals of computational fluid dynamics (CFD)." *AIP conference proceedings*, Vol. 2030. 1: p. 020252. 2018. AIP Publishing LLC.

[11] Suresh Babu, Arun Vishnu, Narsipur, Shreyas and Gopalarathnam, Ashok. "Lift tailoring on unsteady airfoils with leading-edge vortex shedding using an inverse aerodynamic approach." *Physics of Fluids* Vol. 36 No. 5 (2024).

[12] *Modeling Underwater Propulsion of a Helical Drive Using Computational Fluid Dynamics for an Amphibious Rover*, Vol. Volume 6: Dynamics, Vibration, and Control of *ASME International Mechanical Engineering Congress and Exposition* (2023). DOI 10.1115/IMECE2023-113954. URL https://asmedigitalcollection.asme.org/IMECE/proceedings-pdf/IMECE2023/87639/V006T07A045/7239160/v006t07a045-imece2023-113954.pdf, URL https://doi.org/10.1115/IMECE2023-113954.

[13] Costenoble, Miranda, Baeder, James and Jung, Yong Su. "Automated mesh generation and solution analysis of arbitrary airfoil geometries." *Journal of Aircraft* Vol. 59 No. 5 (2022): pp. 1120–1136.

[14] Abobaker, Mostafa, Addeep, Sogair, Afolabi, Lukmon O and Abdulhafid, M Elfaghi. "Effect of mesh type on numerical computation of aerodynamic coefficients of NACA 0012 airfoil." *Journal of Advanced Research in Fluid Mechanics and Thermal Sciences* Vol. 87 No. 3 (2021): pp. 31–39.

[15] Reca Luque, Carlos, Aguilar Torres, Fernando José, Giménez Fernández, Antonio, Aguilar Torres, Manuel Ángel et al. "Methodological proposal for the selection and analysis of the performance of rigid sails considering prestall and post-stall aerodynamic conditions." (2023).

[16] Sharma, Anupam and Visbal, Miguel. "Numerical investigation of the effect of airfoil thickness on onset of dynamic stall." *Journal of Fluid Mechanics* Vol. 870 (2019): p. 870–900. DOI 10.1017/jfm.2019.235.

[17] Tao, Jun, Wang, Xinyu and Sun, Gang. "Stall characteristics analyses and stall lift robustness inverse design for high-lift devices of a wide-body commercial aircraft." *Aerospace Science and Technology* Vol. 111 (2021): p. 106570. DOI https://doi.org/10.1016/j.ast.2021.106570. URL https://www.sciencedirect.com/science/article/pii/S127096382100081X.

[18] MAZUMDER, MD HASIB MAHMUD. "CFD Analysis of NACA Airfoils for Wind Turbine and Aerospace Applications at Low Reynolds Numbers." (2024).

[19] Selvanayagam, Jeyatharsan, Aliaga, Cristhian and Stokes, John. *CFD Simulation of Ground Vortex Intake Test Case using ANSYS FLUENT*: DOI 10.2514/6.2022-0222. URL https://arc.aiaa.org/doi/pdf/10.2514/6.2022-0222, URL https://arc.aiaa.org/doi/abs/10.2514/6.2022-0222.

Copyright ©2026 by ASME