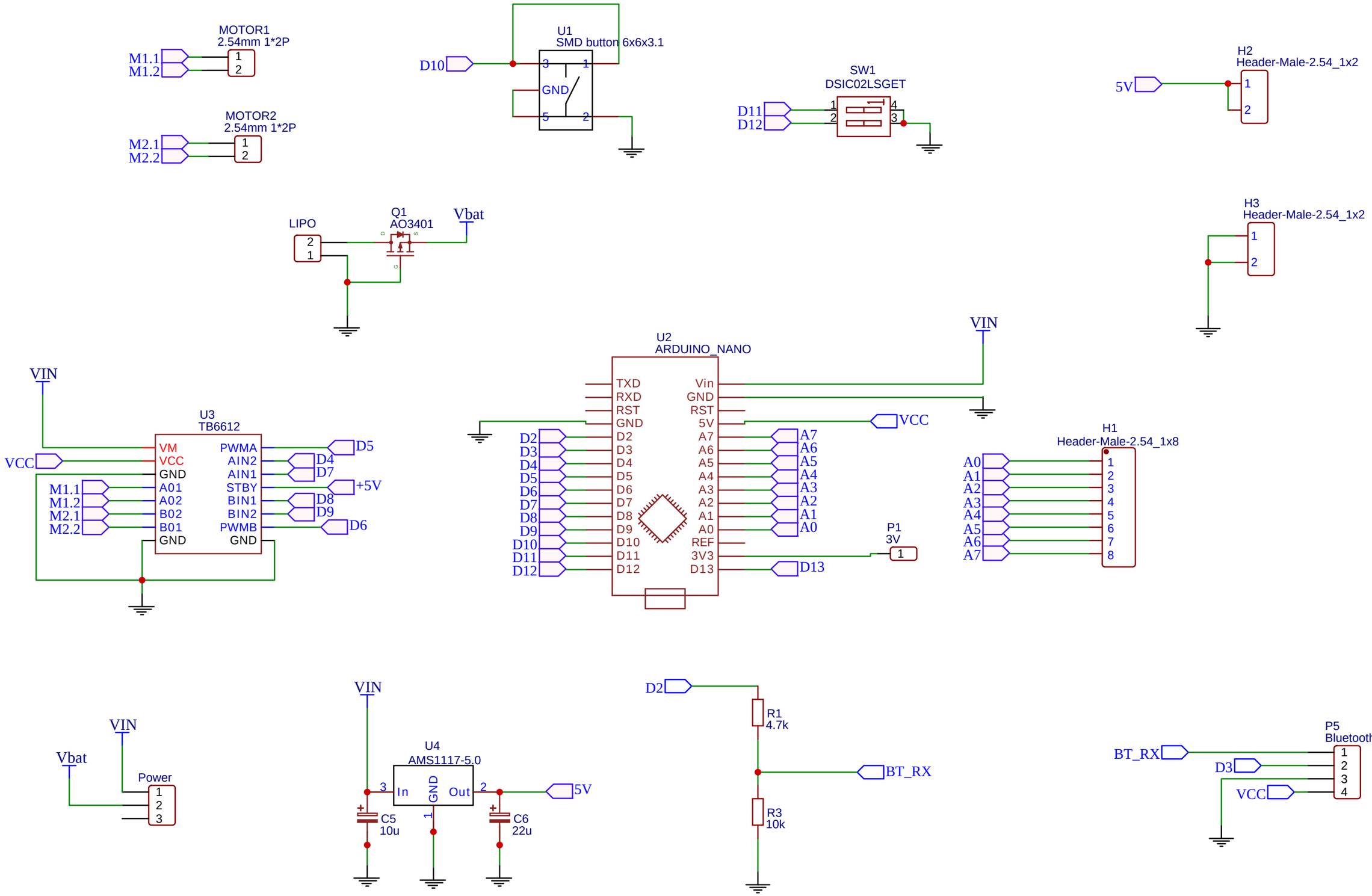

TITLE: Simplex-8	REV: 1.0
Date: 2018-03-22	Sheet: 1/1
EasyEDA V5.3.14	Drawn By: biguan