Underground Cables

An underground cable essentially consists of one or more conductors covered with insulation and surrounded by a protecting cover.

A cable must fulfil the following necessary requirements:

(i) The conductor used in cables should be tinned stranded copper or aluminium of high conductivity. Stranding is done so that conductor may become flexiable and carry more current.

(ii) The conductor size should be such that the cable carries the desired load current without overheating and causes voltage drop within permissible limits.

(iii) The cable must have proper thickness of insulation in order to give high degree of safety and reliability at the voltage for which it is designed.

An underground cable essentially consists of one or more conductors covered with insulation and surrounded by a protecting cover.

A cable must fulfil the following necessary requirements:

(i) The conductor used in cables should be tinned stranded copper or aluminium of high conductivity. Stranding is done so that conductor may become flexiable and carry more current.

(ii) The conductor size should be such that the cable carries the desired load current without overheating and causes voltage drop within permissible limits.

(iii) The cable must have proper thickness of insulation in order to give high degree of safety and reliability at the voltage for which it is designed.

(IV) The cable must ~~have~~ be provided with suitable mechanical protection so that it may withstand the rough use in laying it.

(V) The materials used in the manufacture of cables should be such that there is complete chemical and physical stability throughout.

Construction of cables:

① Cores and conductors.

(I) Insulation. (impreganted paper, varnished cam bric, rubber mineral)

(II) Metallic sheath. (metallic sheath of lead or aluminium)

(IV) Bedding. (fibrous material jute or hessian tape. protect metallic sheath from corrosion)

(V) Armouring.

(VI) Serving.

Classification:

(i) Low-tension (L.T) cables - upto 1000V

(ii) High-tension (H.T) " → upto 11kV

(iii) super- " (S.T) " → upto 22kV to 33kV

(iv) Extra high " (E.HT) " → upto 33 kV to 66kV

(v) Extra super voltage " → beyond 132 kV

Laying of underground cables:

The reliability of underground cable network depends to a considerable extent upon the proper laying and attachment of fitting, i.e. cable end boxes, Joints, branch connectors. There are three main methods - Direct laying, draw-in system and solid system.

Direct laying:

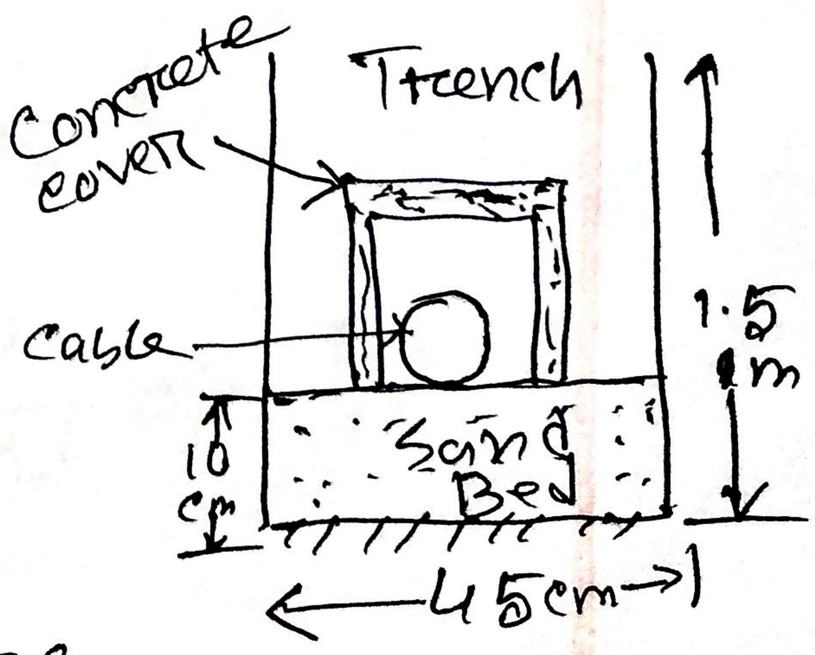

This method of laying is simple and cheap and is much favoured in modern practice. In this method a trench of about 1.5 m

deep and 45 cm wide is dug. The trench is covered with a layer of fine sand (10 cm thickness) and the cable is laid over this sand bed. After the cable has been laid in the trench, it is covered with another layer of sand about 10 cm thickness. The trench is then covered with bricks and other materials in order to protect the cable from mechanical injury.

Insulation Resistance of a Single-core cable:

Consider a single core cable of conductor radius r_1 and internal sheath radius r_2. Let l be the length of the cable and ρ be the resistivity of the insulation. Considering a very small layer of insulation of thickness dx at a radius x. The length through which leakage current tends to flow is dx and the area of ~~x~~ section offered to this flow is $2\pi x l$

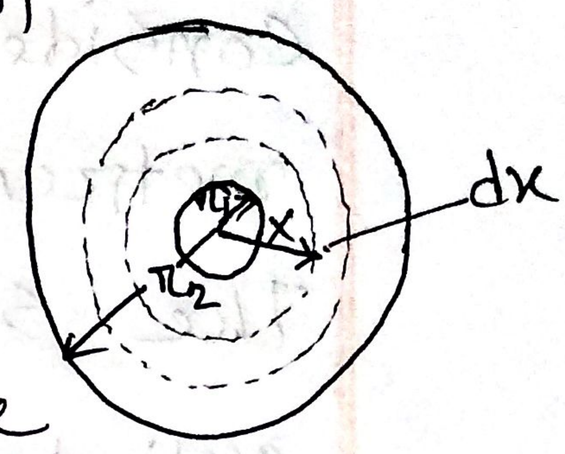

$\therefore$ Insulation resistance of considered layer

$$= \rho \frac{dx}{2\pi x l}$$

Insulation resistance of the whole cable

$$R = \int_{r_1}^{r_2} \rho \frac{dx}{2\pi x l} = \frac{\rho}{2\pi l}\int_{r_1}^{r_2} \frac{1}{x}\, dx$$

$$= \frac{\rho}{2\pi l} \ln \frac{r_2}{r_1}$$

Capacitance of a single-core cable:

Consider a cylinder of radius x metres and axial length 1 m.

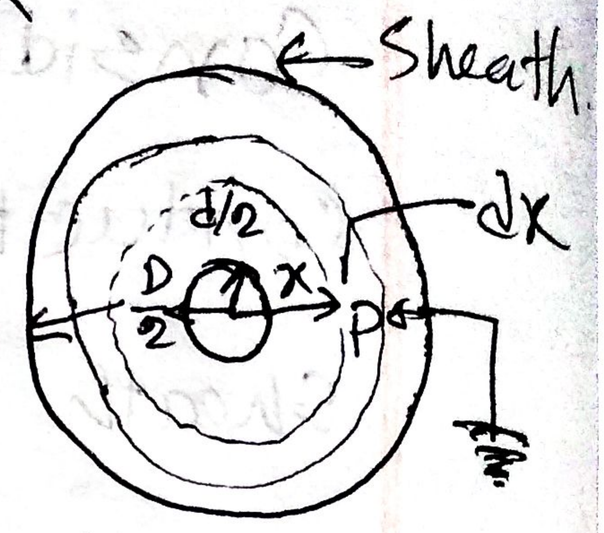

The surface area of this cylinder is $= 2\pi x \times 1 = 2\pi x \, m^2$

Electric flux density at any point P on the considered cylinder is-

$$D_x = \frac{Q}{2\pi x} \, C/m^2$$

Electric intensity, $E_x = \frac{D_x}{\epsilon} = \frac{Q}{2\pi x \epsilon} = \frac{Q}{2\pi x \epsilon_0 \epsilon_r}$ V/m

The potential difference V bet^n conductor and sheath

$$V = \int_{d/2}^{D/2} E_x \, dx = \int_{d/2}^{D/2} \frac{Q}{2\pi x \epsilon_0 \epsilon_r} dx$$

$$= \frac{Q}{2\pi \epsilon_0 \epsilon_r} \int_{d/2}^{D/2} \frac{1}{x} dx$$

$$= \frac{Q}{2\pi \epsilon_0 \epsilon_r} \ln \frac{D}{d}$$

$\therefore$ Capacitance of cable $C = \frac{Q}{V}$

$$= \frac{Q}{\frac{Q}{2\pi \epsilon_0 \epsilon_r} \ln \frac{D}{d}} \text{ F/m}$$

$$= \frac{2\pi\varepsilon_0\varepsilon_r}{\ln(D/d)} \text{ F/m}$$

$$= \frac{2\pi \times 8.854 \times 10^{-12} \times \varepsilon_r}{2.303 \log (D/d)} \text{ F/m}$$

$$= \frac{\varepsilon_r}{41.4 \log(D/d)} \times 10^{-9} \text{ F/m}$$

For l length of cable

$$C = \frac{\varepsilon_r \times l}{41.4 \log(D/d)} \times 10^{-9} \text{ F}$$

Dielectric stress in a single core cable:

under operating conditions, the insulation of a cable is subjected to electrostatic forces. This is known as dielectric stress. The dielectric stress at any point in a cable is intact the potential gradient at that point.

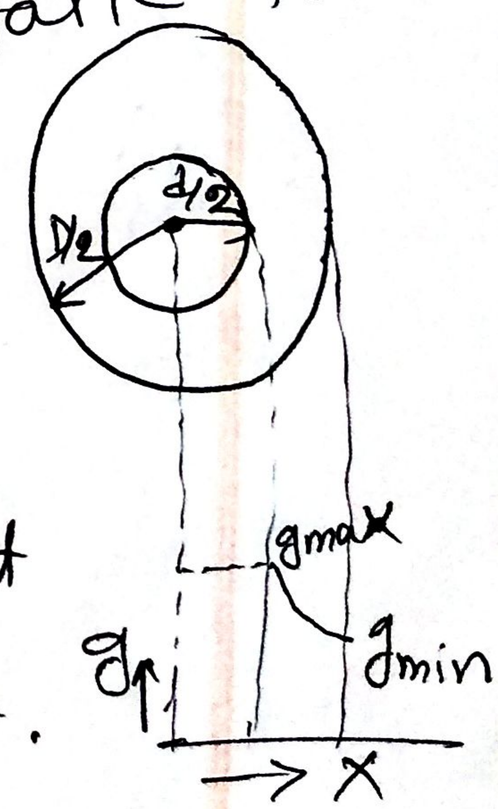

Consider a single core cable with core diameter d and internal sheath diameter D. The electric intensity at a point x metres from the centre of the cable

13

$$E_x = \frac{Q}{2\pi \varepsilon_0 \varepsilon_r x} \text{ V/m} \quad \text{—— (I)}$$

Electric intensity is equal to potential gradient. Therefore potential gradient g at a point x m from the centre of cable is $g = E_x$

$$\text{or } g = \frac{Q}{2\pi \varepsilon_0 \varepsilon_r x} \text{ V/m} \quad \text{—— (I)}$$

potential difference, $V = \frac{Q}{2\pi \varepsilon_0 \varepsilon_r} \ln \frac{D}{d}$ V

$$\Rightarrow Q = \frac{2\pi \varepsilon_0 \varepsilon_r V}{\ln \frac{D}{d}} \quad \text{—— (II)}$$

$$\therefore g = \frac{\frac{2\pi \varepsilon_0 \varepsilon_r V}{\ln \frac{D}{d}}}{2\pi \varepsilon_0 \varepsilon_r x}$$

$$= \frac{V}{x \ln \frac{D}{d}} \quad \text{—— (III)}$$

from (III) potential gradient varies inversly as the distance x. Therefore it will be maximum when x is minimum. And will be minimum " x " max^m.

$\therefore$ max^m potential gradient

$$g_{max} = \frac{2V}{d \ln \frac{D}{d}} \quad \left[x = \frac{d}{2}\right]$$

$$g_{min} = \frac{2V}{D \ln \frac{D}{d}} \quad \left[x = \frac{D}{2}\right]$$

$$\therefore \frac{g_{max}}{g_{min}} = \frac{D}{d}.$$

Most economical Conductor size:

we know, $g_{max} = \frac{2V}{d \ln \frac{D}{d}}$ V/m

g_{max} will be minimum, when

$$\frac{d}{dd}\left[\frac{2V}{d \ln \frac{D}{d}}\right] = 0$$

$$\Rightarrow \ln \frac{D}{d} + d \cdot \frac{1}{D/d} \cdot \frac{-D}{d^2} = 0$$

$$\Rightarrow \ln \frac{D}{d} + \frac{d^2}{D} - \frac{-D}{d^2} = 0$$

$$\Rightarrow \ln \frac{D}{d} - 1 = 0$$

$$\Rightarrow \ln \frac{D}{d} = 1$$

$$= e^1$$

$$\Rightarrow \frac{D}{d} = 2.718$$

$$\therefore d = \frac{D}{2.718}$$

Most economical cond^n.

diameter $d = \frac{D}{2.718}$.

For this $g_{max} = \frac{2V}{d}$ V/m

I Grading: The process of achieving uniform electrostatic stress in the dielectric of cables is known as grading of cables.

II Capacitance grading: The process of achieving uniformity in the dielectric stress by using layers of different dielectrics is known as capacitance grading.

Here, relative permitivity ε_r of any layer is inversly proportional to its distance from the centre. Under such condition the value of potential grading at any point in the dielectric is constant and is independent of its distance from the centre.

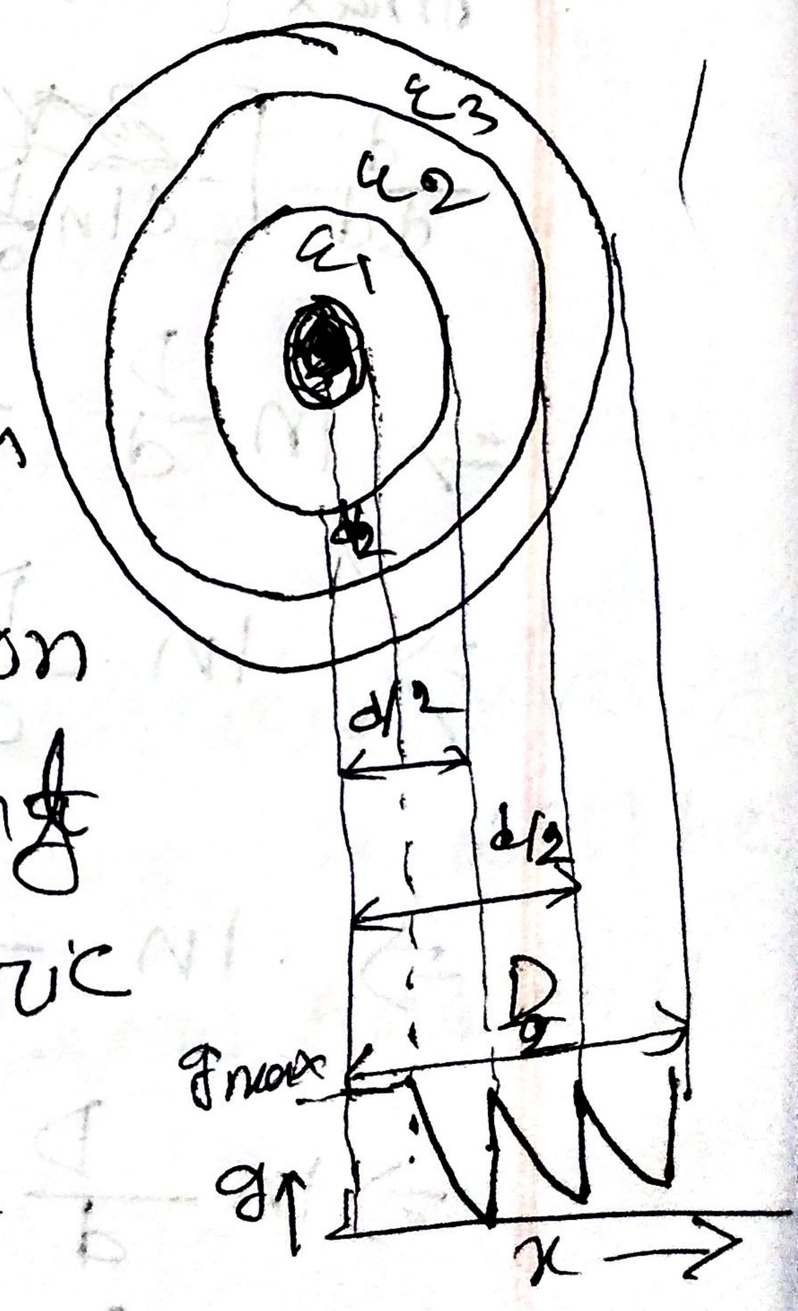

Three dielectric of diameter d_1, d_2 D and of relative permitivity ε_1, ε_2, ε_3. Here,

$\varepsilon_1 > \varepsilon_2 > \varepsilon_3$.

we know: $\varepsilon_r \propto \frac{1}{x}$

$$\varepsilon_r = \frac{K}{x}.$$

potential gradient at distance x from centre

$$= \frac{Q}{2\pi\varepsilon_0\varepsilon_r x} = \frac{Q}{2\pi\varepsilon_0 \frac{K}{x} \cdot x} = \frac{Q}{2\pi\varepsilon_0 K}$$

So, $g_{1max} = \frac{Q}{\pi\varepsilon_0\varepsilon_1 d}$

$$g_{2max} = \frac{Q}{\pi\varepsilon_0\varepsilon_2 d_1}$$

$$g_{2max} = \frac{Q}{\pi\varepsilon_0\varepsilon_3 d_2}$$

$\therefore g_{1max} = g_{2max} = g_{3max} = g_{max}$

$$\frac{1}{\varepsilon_1 d} = \frac{1}{\varepsilon_2 d_1} = \frac{1}{\varepsilon_3 d_2}$$

$\Rightarrow \varepsilon_1 d = \varepsilon_2 d_1 = \varepsilon_3 d_2$

potential difference across the inner layer is

$$V_1 = \int_{d/2}^{d_1/2} g\,dx = \int_{d/2}^{d_1/2} \frac{Q}{2\pi\varepsilon_0\varepsilon_1 x}\,dx$$

$$= \frac{Q}{2\pi\varepsilon_0\varepsilon_1} \ln\frac{d_1}{d} = \frac{g_{max}}{2} d \ln\frac{d_1}{d}$$

Similarly, $$V_2 = \frac{Q}{2\pi\varepsilon_0\varepsilon_1} \ln\frac{d_2}{d_1} = \frac{g_{max}}{2} d_1 \ln\frac{d_2}{d_1}$$

$$V_3 = \frac{Q}{2\pi\varepsilon_0\varepsilon_2} \ln\frac{D}{d_2} = \frac{g_{max}}{2} d_2 \ln\frac{D}{d_2}$$

$$\therefore V = V_1 + V_2 + V_3$$

$$= \frac{g_{max}}{2}\left[d\ln\frac{d_1}{d} + d_1\ln\frac{d_2}{d_1} + d_2\ln\frac{D}{d_2}\right]$$

Intersheath Grading: In this method of cable grading, a homogeneous dielectric is used, but it is divided into various layers by placing metallic intersheaths bet^n the core and lead sheath. The intersheaths are held at suitable potentials which are inbetween the core potential and earth potential. This arrangement improves voltage distribution in the dielectric of the cable and consequently more uniform potential gradient

is obtained.

max^m stress betn core and intersheath 1

$$g_{1max} = \frac{V_1}{\frac{d}{2} \ln \frac{d_1}{d}}$$

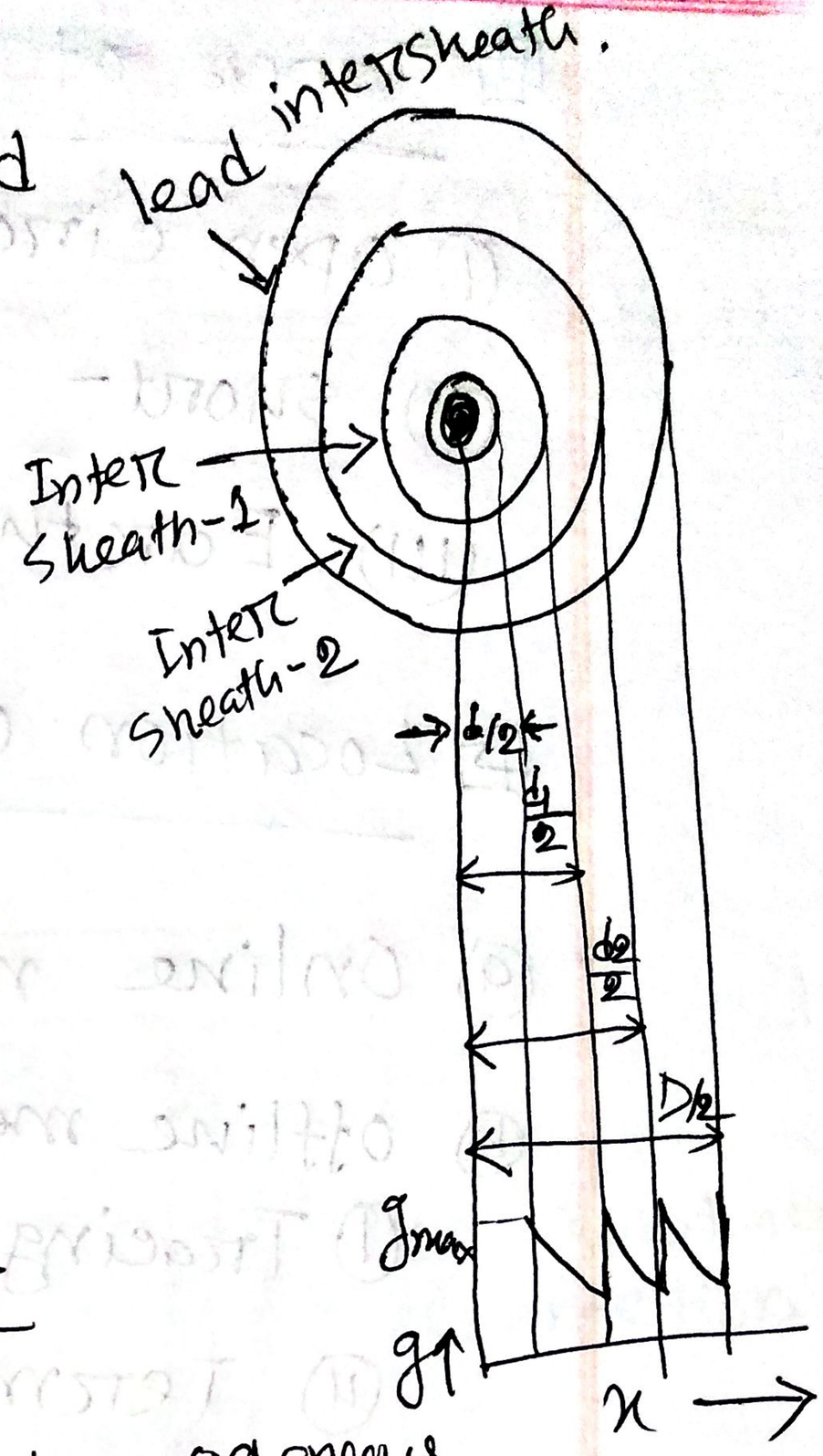

Similarly,

$$g_{2max} = \frac{V_2}{\frac{d_1}{2} \ln \frac{d_2}{d_1}}$$

$$g_{3max} = \frac{V_3}{\frac{d_2}{2} \ln \frac{D}{d_2}}$$

Since the dielectric is homogeneous the maximum stress in each layer is the same. i.e -

$$g_{1max} = g_{2max} = g_{3max} = g_{max}$$

$$\therefore \frac{V_1}{\frac{d}{2} \ln \frac{d_1}{d}} = \frac{V_2}{\frac{d_1}{2} \ln \frac{d_2}{d_1}} = \frac{V_3}{\frac{d_2}{2} \ln \frac{D}{d_2}}$$

$$\therefore V = V_1 + V_2 + V_3$$

Types of cable Faults:

(i) open circuit Fault
(ii) short- circuit Fault.
(iii) Earth Fault.

Location of cable Fault:

(a) Online methods

(b) offline methods
  (i) Tracing methods
  (ii) Terminal methods
    (i) Murray loop test
    (ii) Varley loop test

Online methods
(a) Cable thumping
(b) Time domain reflectometer (TDR)
(c) High voltage radar methods.
  (i) Arc reflection methods
  (ii) surge pulse "
  (3) Voltage decay reflection methods

Murray loop test: The murray loop test is the most common and accurate method of locating earth fault or short-ckt fault in underground cables.

① **Earth Fault:**

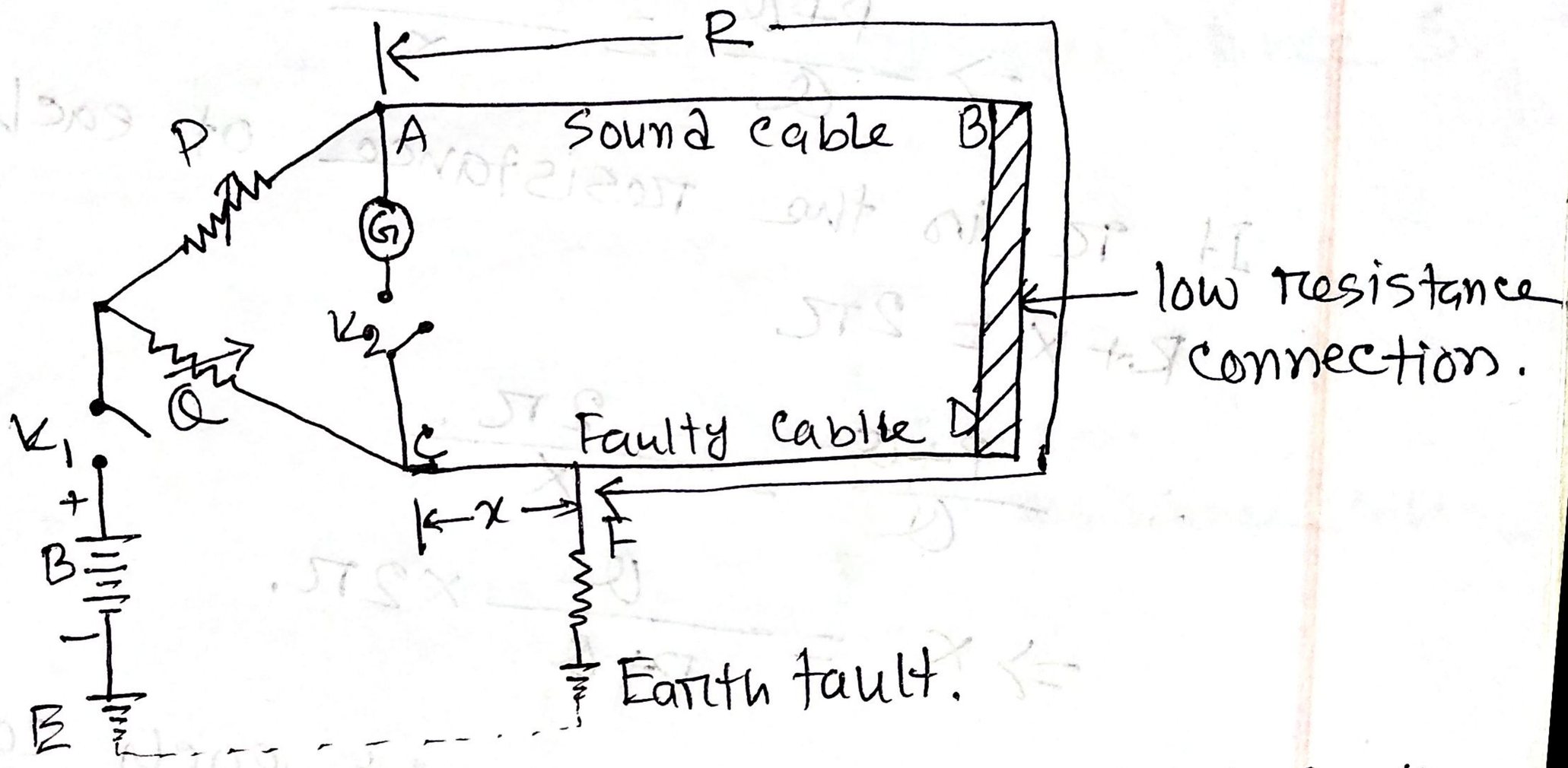

Here AB is the sound cable and CD is the faulty cable, the earth fault occurring at point F. The far end D of the faulty cable is joined to the far end B of the sound cable through a low resistance link.

Let R = resistance of the conductor loop upto the fault from test end.

x = resistance of other end.

P, Q, R and X are the four arms of the Wheatstone bridge.

In the balanced position of the bridge we have -

$$\frac{P}{Q} = \frac{R}{X}$$

$$\text{or } \frac{P}{Q} + 1 = \frac{R}{X} + 1$$

$$\Rightarrow \frac{P+Q}{Q} = \frac{R+X}{X}$$

If r is the resistance of each cable, then

$$R + X = 2r$$

$$\therefore \frac{P+Q}{Q} = \frac{2r}{X}$$

$$\Rightarrow X = \frac{Q}{P+Q} \times 2r.$$

If l is the length of each cable in m then resistance per metre length of cable $= \frac{r}{l}$.

$\therefore$ Distance of fault point from test end is

$$d = \frac{X}{r/l} = \frac{Q}{P+Q} \times 2r \times \frac{l}{r} = \frac{Q}{P+Q} \times 2l$$

$$= \frac{Q}{P+Q} \times (\text{loop length})(\text{in m}).$$

Varley loop test: The varley loop test is also used to locate earth and short ckt fault in UC. This test is also employs Wheatstone bridge principle. It differs from Murray loop test in that here the ratio arms P and Q are fixed. Balance is obtained by adjusting the variable resistance S.

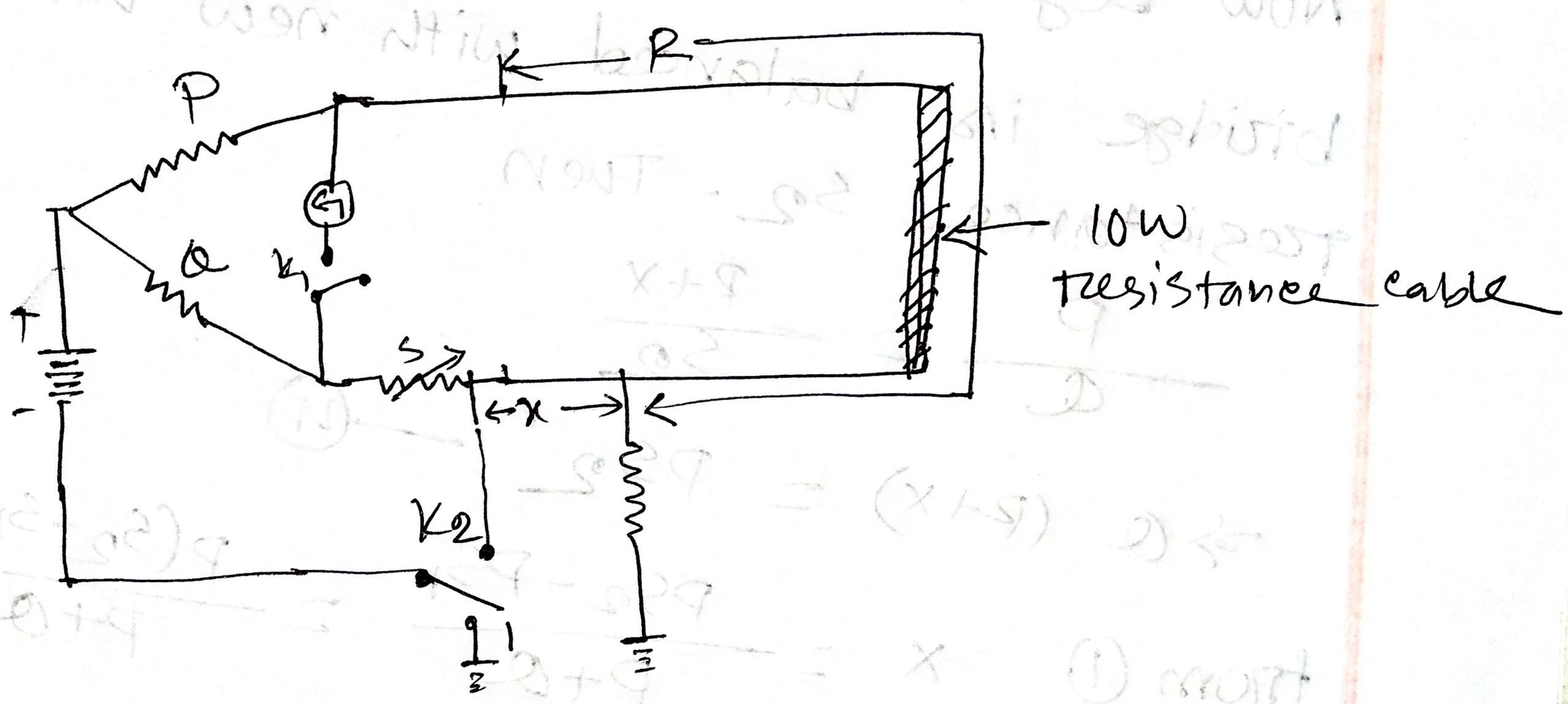

For earth fault or short-ckt fault, the key K_2 is first thrown to position 1. The variable resistance S is varied till the bridge is balanced for resistance value of S_1, then.

$$\frac{P}{Q} + 1 = \frac{R}{x + S_1} + 1$$

$$\Rightarrow \frac{P+Q}{Q} = \frac{R + x + S_1}{x + S_1}$$

$$\Rightarrow Px + Qx + PS_1 + QS_1 = QR + Qx + QS_1$$

$$\Rightarrow x(P+Q) = Q(R+x) - PS_1$$

$$\Rightarrow x = \frac{Q(R+x) - PS_1}{P+Q} \quad \text{—— (1)}$$

Now key is thrown to position 2, and bridge is balanced with new value of resistance S_2. Then

$$\frac{P}{Q} = \frac{R+x}{S_2} \quad \text{—— (2)}$$

$$\Rightarrow Q(R+x) = PS_2$$

from (1) $x = \frac{PS_2 - PS_1}{P+Q} = \frac{P(S_2 - S_1)}{P+Q}$

Since the values of P, Q, S_1 and S_2 are known, the value of x can be determined.

Loop resistance $= R + x = \frac{P}{Q} S_2$

If r is the resistance of the cable per metre length then -

Distance of fault from the test end is

$$d = \frac{X}{r} \text{ metres.}$$