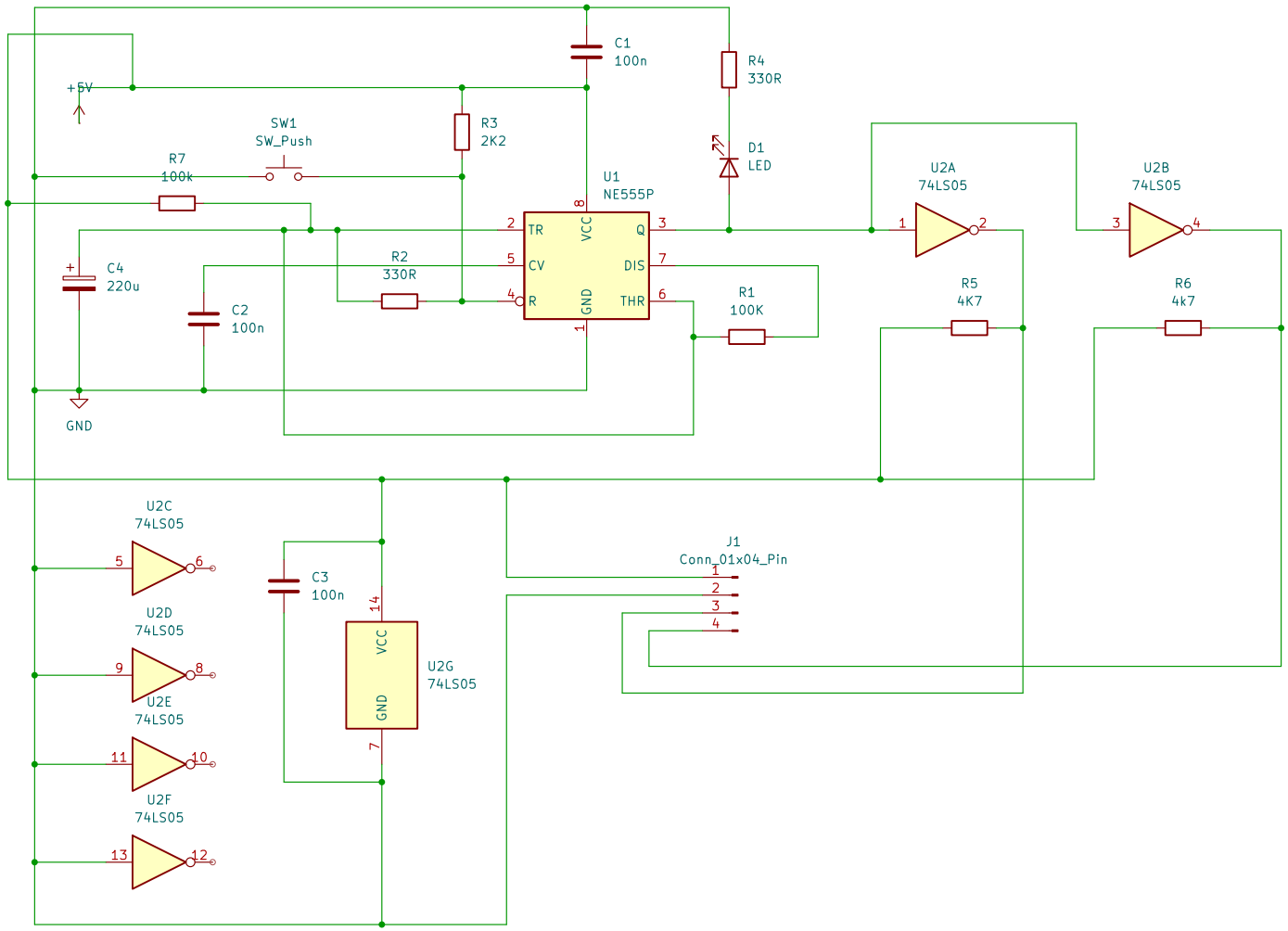

PowerOnReset and reset on demand with only two ics: ne555, 74ls05.

Sheet: /
File: 68kreset.kicad_sch

Title: MC68K reset & halt circuit v1.0

Size: A4	Date:	Rev:
KiCad E.D.A. 8.0.2		Id: 1/1