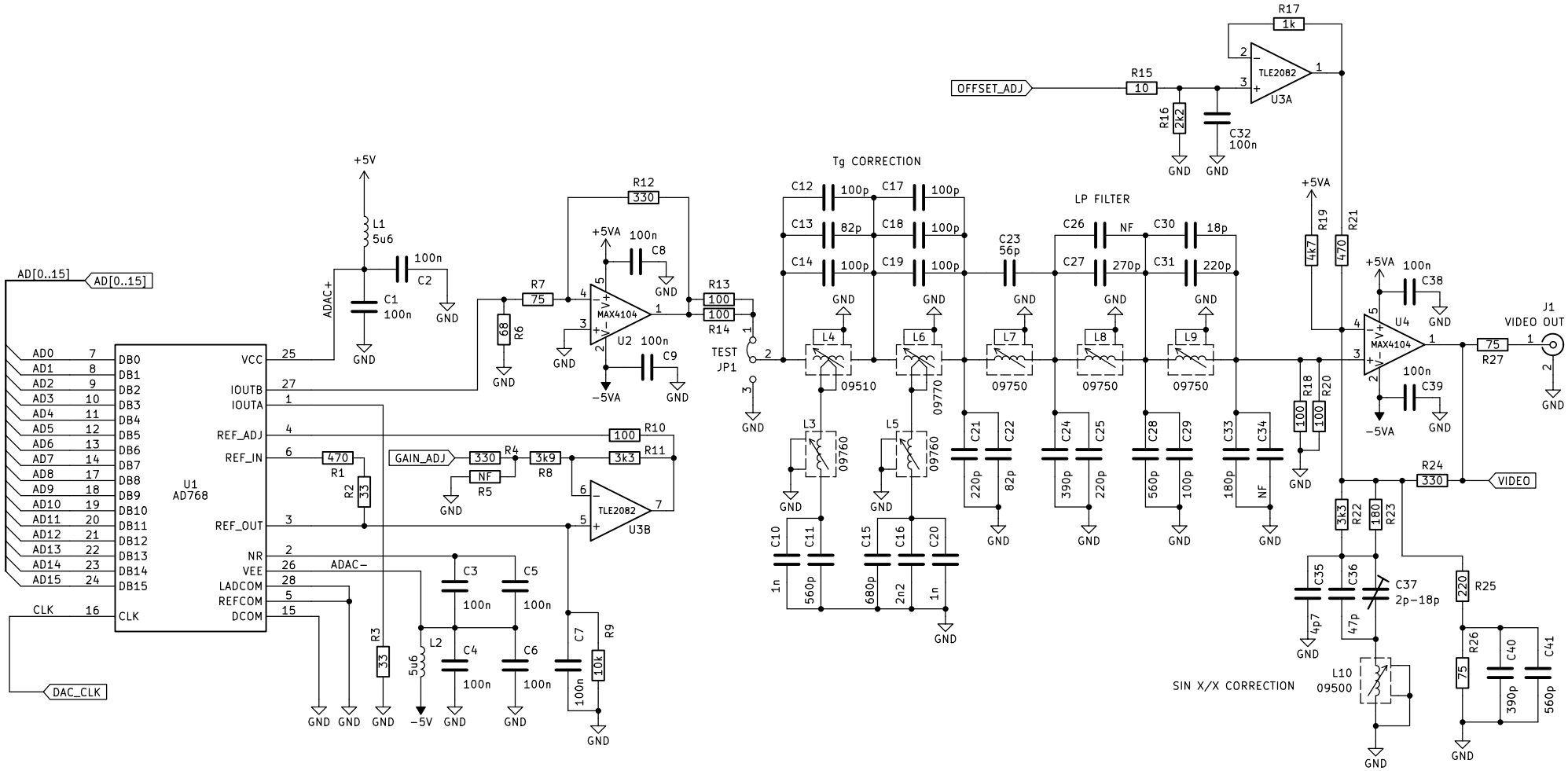

VIDEO OUTPUT

Licensed under the CERN−OHL−P v2
Copyright 2024 Matt Millman

Sheet: /video/
File: video.kicad_sch

Title: HackDAC Alpha

Size: A4	Date: 2024−06−13	**Rev: 2**
KiCad E.D.A. 8.0.6		Id: 1/5

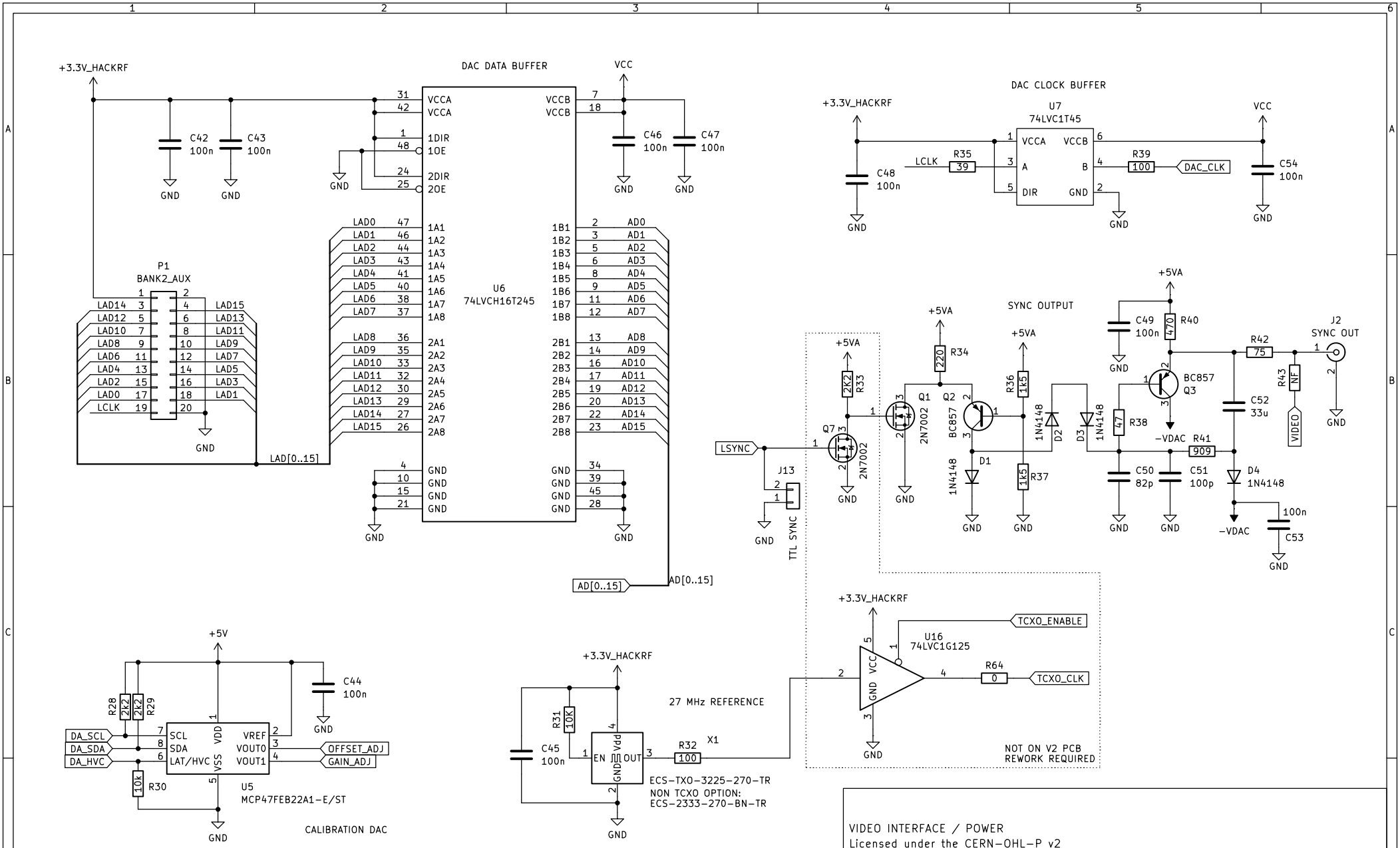

VIDEO INTERFACE / POWER

Licensed under the CERN-OHL-P v2
Copyright 2024 Matt Millman

Sheet: /video-misc/
File: video-misc.kicad_sch

Title: HackDAC Alpha

Size: A4	Date: 2024-06-13	**Rev: 2**
KiCad E.D.A. 8.0.6		Id: 2/5

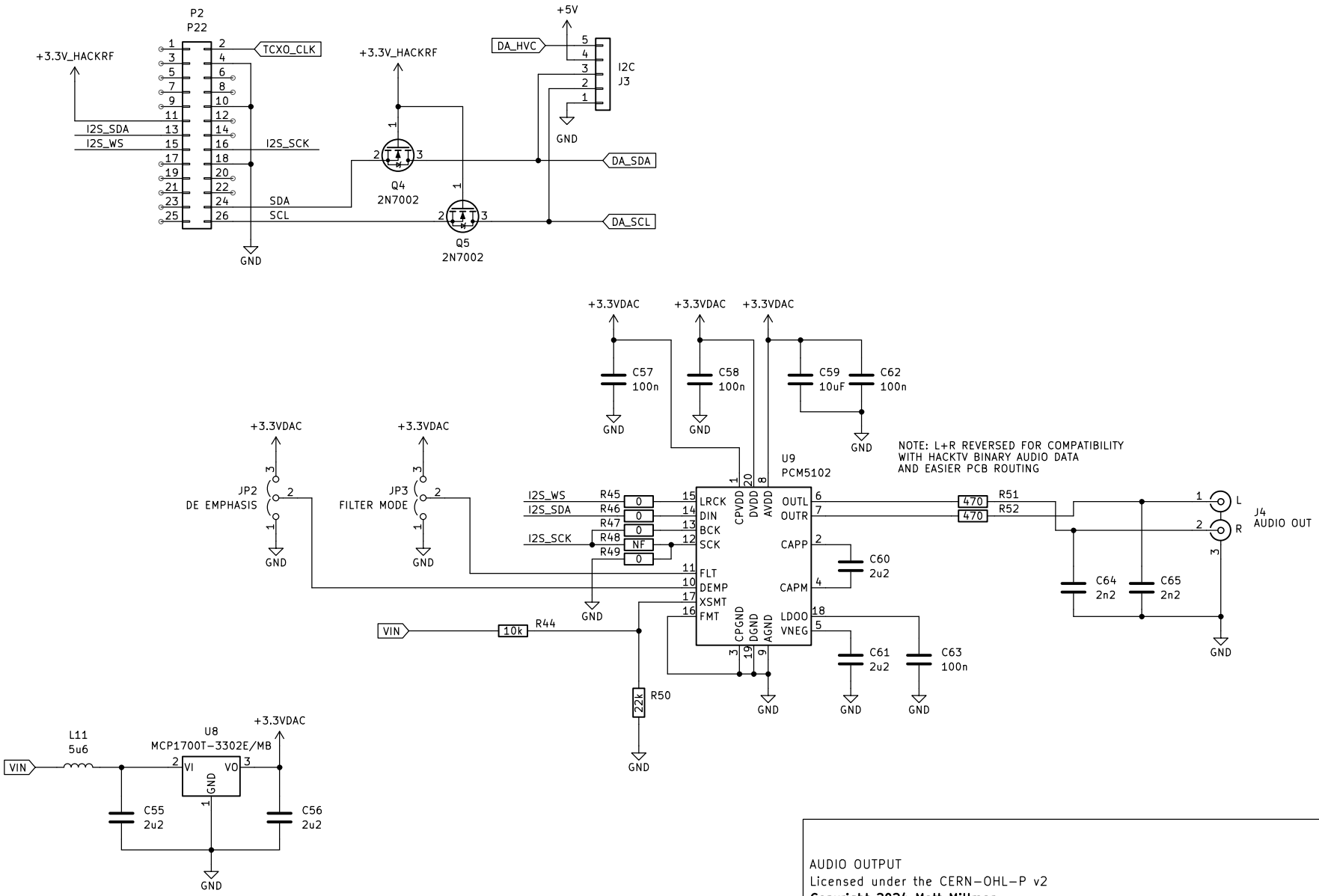

AUDIO OUTPUT

Licensed under the CERN-OHL-P v2
Copyright 2024 Matt Millman

Sheet: /audio/
File: audio.kicad_sch

Title: HackDAC Alpha

Size: A4	Date: 2024-06-13	**Rev: 2**
KiCad E.D.A. 8.0.6		Id: 3/5

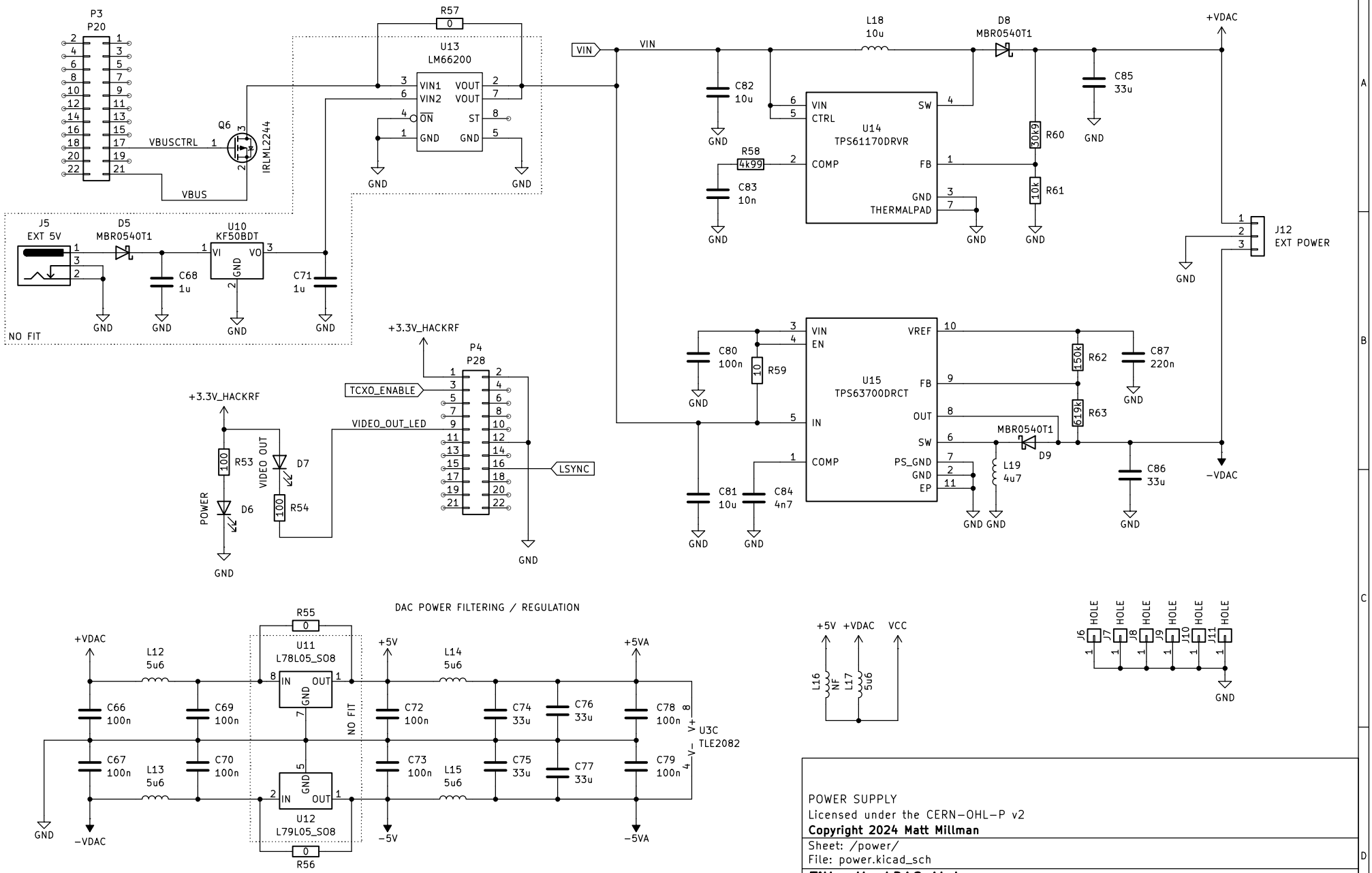

POWER SUPPLY

Licensed under the CERN-OHL-P v2
Copyright 2024 Matt Millman

Sheet: /power/
File: power.kicad_sch

Title: HackDAC Alpha

Size: A4	Date: 2024-06-13	**Rev: 2**
KiCad E.D.A. 8.0.6		Id: 4/5