Compute As A Service BareMetal

Product Specification Sheet

Last Updated: 09-Dec-25 | Public

Service Overview

The adoption of Infrastructure-as-a-Service (IaaS) continues to grow as enterprises seek to capitalize on the scalability, agility, and cost efficiencies inherent in cloud computing. Although virtualization remains a cornerstone of traditional IaaS architectures, the incorporation of bare metal servers introduces an additional layer of capability that enhances infrastructure performance and operational control. By integrating bare metal servers alongside virtualized resources, organizations gain access to a complementary set of advantages that broaden the strategic value of their IaaS deployments.

Bare metal servers enable enterprises to realize the full performance benefits associated with dedicated physical hardware. In contrast to virtual machines, bare metal servers provide direct access to compute resources without the overhead introduced by a hypervisor layer. This affords organizations the ability to utilize the complete processing capacity of the underlying infrastructure, resulting in superior computational throughput, reduced latency, and enhanced input/output (I/O) performance. These characteristics make bare metal servers particularly well-suited for high-intensity, performance-sensitive workloads that demand consistent and predictable infrastructure behavior.

Yntraa Cloud delivers a comprehensive Compute-as-a-Service (CaaS) portfolio designed to provide on-demand, scalable, and high-performance processing capabilities for modern enterprises. This service model abstracts the underlying hardware complexity and offers flexible compute consumption, enabling organizations to optimize operations, accelerate workloads, and support digital transformation initiatives.

Yntraa Cloud's compute stack spans multiple deployment models and technology layers to meet diverse performance, cost, and scalability requirements:

Yntraa Cloud Bare Metal Services provide direct access to dedicated physical servers without virtualization and operating system overhead. These environments are ideal for latency-sensitive, high-throughput workloads such as big data analytics, AI/ML training, high-performance computing (HPC), and large-scale databases.

Businesses benefit from:

- Full control over hardware resources
- Consistent performance
- Enhanced security and isolation
- Customizable configurations

Features

Yntraa Cloud BareMetal service features are illustrated below.

- **Tailored Hardware Solutions:** Set up and scale your hardware configuration for any project. Custom setups might take a bit longer, but the boost in performance is worth the wait.
- **Raw Bare Metal Power:** Fully dedicated resources to serving your projects and featuring with
- cutting-edge INTEL and AMD CPUs and RAM configurations
- **100% Dedicated Resources**: Take total control with resources that are 100% yours. No sharing, no interruptions - just peak performance for your most demanding projects.
- **Choice of OS and Virtualization:** Select your own operating system and virtualization for your workload like MS windows, Redhat Linux, Suse Linux. Rockey Linux, Ubuntu and Debian etc. Also, under this service you can bring your own licenses including Microsoft windows through BYOL.
- **Customizable Storage**: Choose from a range of HDD, SSD, and NVMe SSD storage options. Our flexible software and hardware RAID configurations make scaling simple.
- **Unlimited Traffic**: Enjoy unlimited data transfer from 1 Gbit/s to 10 Gbit/s (subject to our fair usage policy).
- **Exclusive IP Addresses**: Each server comes with unique IPv4 and IPv6 addresses. You can also configure extra IPs to scale your growing network demands.
- **Create Private Networks**: Build your own clouds with our private networking features. Isolate your traffic flow to maximize both security and efficiency. You can buy domains from any domain registrar or reseller or bring your own to attach.
- **DNS Service**: Manage DNS settings easily through our control panel, with your domain name facilitating seamless integration.
- **Remote Management**: Take control from anywhere with IPMI for advanced remote server management.
- **Web UI for Easy Management**: Our intuitive Customer Control Panel simplifies the management of your server, putting efficient oversight and administration right at your fingertips.

All Yntraa Cloud solutions (e.g. Virtual machine, object storage, Backup and recovery etc) are interconnected and empower you to scale your infrastructure as needed.

Service Plan

Yntraa Bare Metal instances are built on enterprise-grade x86 architectures, powered by industry-standard Intel Xeon Scalable and AMD EPYC processors. Hardware is organized into three portfolio tiers to address varying workload profiles:

General Purpose	Business Critical	Mission Critical
BM1a.metal.32xlarge **BM1a.metal.48xlarge**	**BM2a.metal.64xlarge**	**BM2a.metal.96xlarge**
Configuration: • Designed for balanced CPU-to-memory workloads requiring predictable performance and cost efficiency. • 32/48 cores | 512/768 GB Memory | NVMe + RAID-protected enterprise SSD | Dual 25 GbE	**Configuration:** • Optimized for large-scale production workloads that demand higher memory and I/O throughput. • 64 cores | 512 GB Memory | NVMe + RAID-protected enterprise SSD | Dual 25 GbE	**Configuration**: • Premium configurations engineered for extreme performance, ultra-low latency, and memory-intensive workloads. • 96 cores | 1 TB Memory | NVMe arrays | Dual 25 GbE+ (RDMA-capable where applicable)
Use Cases: Web servers, application servers, middleware, CI/CD pipelines, dev/test environments, and non-critical databases.	**Use Cases:** ERP platforms (SAP, Oracle, MS Dynamics), financial transaction systems, large relational databases, and data warehousing.	**Use Cases**: AI/ML training, in-memory analytics (SAP HANA), high-frequency trading, NFV/telco workloads, and scientific HPC.
Key Features: • Single-socket or entry dual-socket AMD EPYC platforms • DDR5 memory for improved bandwidth and latency • Enterprise RAID controller for OS and data resiliency • High-throughput east-west and north-south networking	**Key Features:** • Dual-socket AMD EPYC platforms • High-density DDR5 memory configurations • Enhanced I/O throughput for database-heavy workloads • Redundant power, cooling, and networking	**Key Features**: • High-frequency AMD EPYC processors • Near-terabyte memory capacity per host • Ultra-low-latency NVMe storage architecture • High-bandwidth networking with optional RDMA

All processors deliver trusted performance and exceptional energy efficiency, optimized for diverse workload requirements such as compute-intensive analytics, memory-bound databases, and high-throughput transaction processing.

Service Details

This section provides an overview of the core technical building blocks, components, and operational modules that form the foundation of the Yntraa Bare Metal Service. For comprehensive guidance and deeper technical instruction, please refer to the detailed User Manual available at http://doc.yntraa.cloud

High Level Architecture

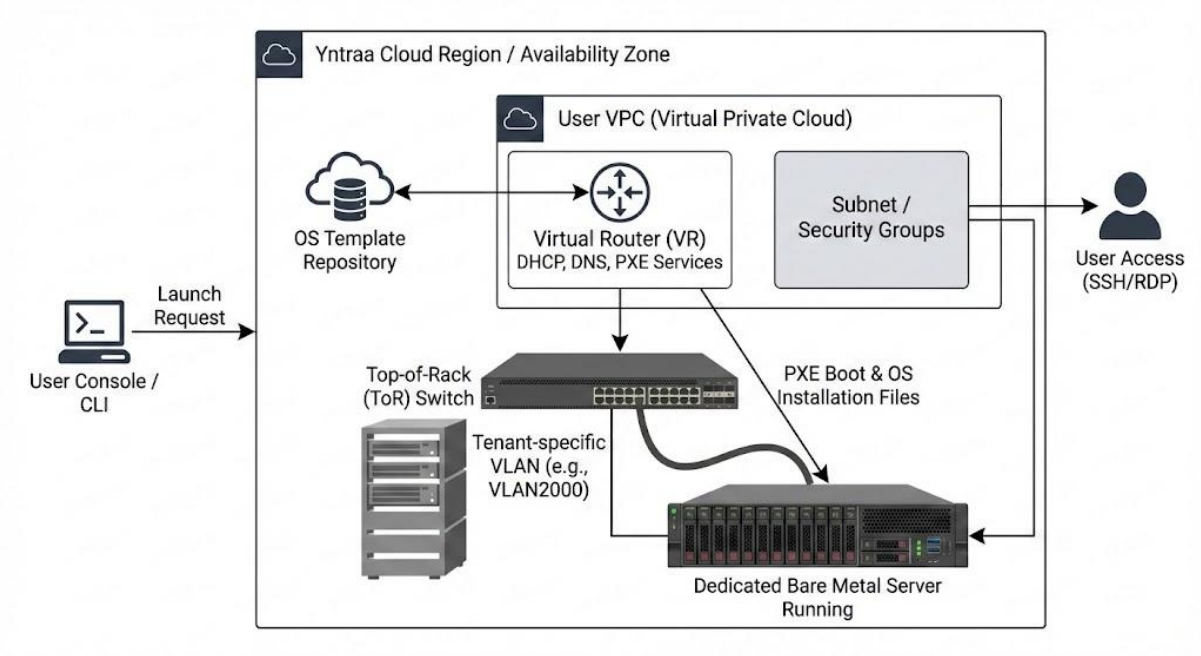

A launch request initiated from the Console or CLI triggers the orchestration engine to configure the top-of-rack switch with a tenant-specific VLAN and set up the Virtual Router (VR) within the user's VPC to provide DHCP, DNS, and PXE services. The dedicated physical server is then powered on through IPMI, performs a PXE boot using either the OS template repository or a BYOL OS image, and proceeds with an operating system installation. Once provisioned, the server automatically joins the VPC with full network isolation and service offload capabilities.

Yntraa BareMetal Service seamlessly integrates dedicated physical servers as native resources within the customer's Virtual Private Cloud (VPC), enabling full interoperability with other cloud components while maintaining strict hardware-level isolation. Networking for BareMetal instances is provisioned exclusively through CloudStack Advanced Zone configurations,

leveraging VLAN-based segmentation to support secure multi-tenancy and utilizing the Virtual Router (VR) for comprehensive service offload.

Through this architecture, bare metal servers' benefit from the same robust, automated networking features available to other Yntraa Cloud resources—such as dynamic IP assignment, traffic routing, and security policy enforcement—without requiring any manual switch configuration. This ensures consistent behavior, streamlined provisioning, and operational simplicity across the entire cloud environment.

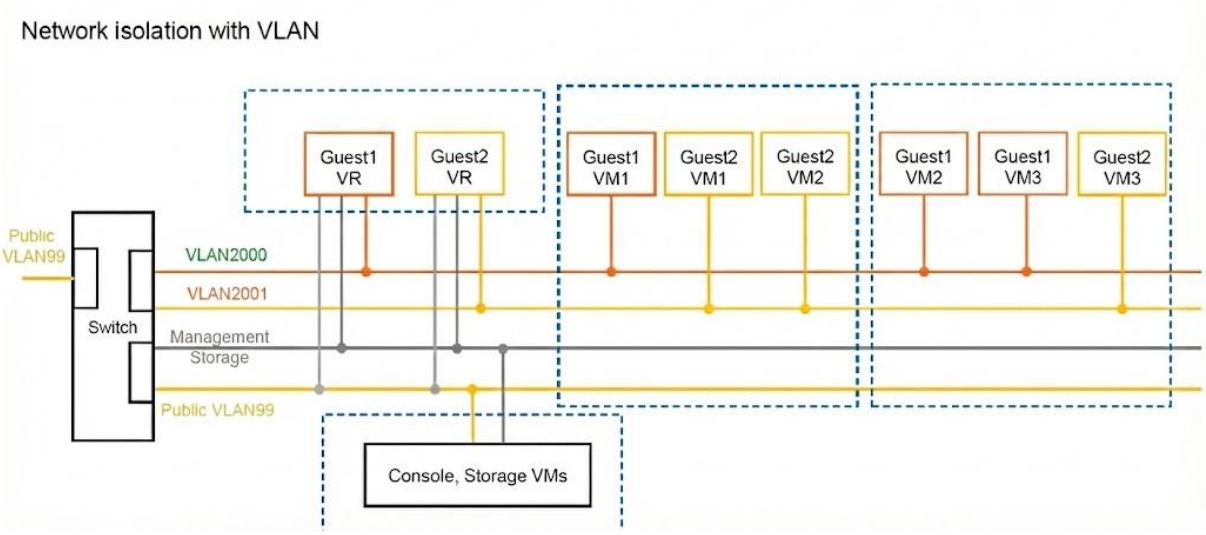

The networking model follows a defense-in-depth strategy: physical single-tenancy on the server, combined with logical multi-tenancy via VLANs and VR services. For instance, a bare metal host joins a dedicated VLAN, receives boot files from the OS template repository, and integrates into the VPC subnet post-installation, maintaining compliance with data sovereignty requirements.

- VLAN-Based Isolation: Tenant-specific VLANs (e.g., VLAN 2000) are automatically or manually assigned during provisioning, segregating traffic at the physical layer. The backend engine programs top-of-rack (ToR) switches via JSON-defined topology mappings (e.g., MAC address to port associations), supporting high-throughput interfaces up to 100 GbE for east-west and north-south data flows.
- Virtual Router Offload: The VR within the VPC provides essential services mapped directly to bare metal hosts, including DHCP for IP leasing, Source NAT (SNAT), Static NAT, Port Forwarding, etc.

Service	**Description**	**Protocol/Mechanism**
DHCP	Dynamic IP assignment during PXE boot	VR-offloaded UDP broadcasts
DNS	Name resolution for internal domains	VR-integrated forwarding

PXE Boot	Kernel/initrd loading for OS installation	TFTP/NFS over VLAN
NAT (SNAT/Static)	Address translation for outbound/inbound traffic	VR stateful inspection
VPN	Secure site-to-site or remote access	IPsec/L2TP via VR

All additional services are available on a subscription basis and can be seamlessly attached to the Yntraa Cloud BareMetal Service. Each subscribed service is governed by its own specifications, along with the corresponding terms and conditions. Customers are advised to refer to the respective Product/Service Specification (PSS) documents for detailed information.

Service Support and SLA

The 24x7 Support Desk serves as the central point of contact between customers and the cloud operations team. It provides a broad range of services extending beyond a standard Help Desk, including:

- Processing incidents and customer complaints
- Handling Change and Service Requests using IT service management processes such as Release Management, Configuration Management, and Problem Management
- Call and Ticket Management functions
- Comprehensive Call Centre and Help Desk activities designed to reduce incident life cycles efficiently

Yotta maintains a strong team of highly skilled and experienced project managers who have successfully delivered complex projects. These project managers provide customers with value-added benefits such as effective risk management, clear communication, and improved visibility throughout the project life cycle.

Customers may submit support tickets describing issues in accordance with the applicable support policy procedures. These support policies, available in the Cloud Documentation, provide comprehensive details regarding support options, access methods, support business hours, severity classifications, resources available, and support limitations. Yntraa cloud will use commercially reasonable efforts to respond to support requests; however, no specific response time objectives apply to the basic level support.

Unless otherwise agreed in writing, support is provided solely to the Customer and its authorized users, and not to end users of the Customer's own solutions. Customers are solely responsible for providing support and services to their end users.

Support for non-Yntraa products is provided by the respective third-party vendors and may require a separate support contract.

Yntraa Cloud provides the Foundation Support Plan at no additional charge as part of the Cloud

Services subscription. Customers may also choose to upgrade to the Prime or Priority Support Plans based on their business criticality and support requirements. For additional information on support options, support plans, and detailed support features, please refer to the Cloud Assure service documentation.

Service Level Agreements

Yntraa Cloud provides the following Service Level Agreements (SLAs) for Cloud Services when Yntraa Cloud is identified as the Provider in the Yntraa Cloud Catalog. For third-party services, any applicable SLA will be governed by the respective third-party vendor's terms. SLA credits constitute the Client's sole and exclusive remedy for Yntraa's failure to meet a specified service level.

Yntraa will validate SLA claims based on information provided by the Client along with Yntraa's system records, and will notify the Client of any approved credits via the Cloud UI or email. Yntraa's reasonable determination regarding SLA credits shall be final. The Customer agrees to continue making full payments for Cloud Services while any SLA claim is under review.

Detailed service level commitments for Cloud Services are defined in the Service Level Agreement (SLA) documentation. Customers should refer to the Cloud and Cloud Assure Service SLA documents for complete information.

Service Transition and Migration

Service Transition and Migration refer to the processes involved in moving services from a current operational state to a new or updated environment—such as transitioning from a legacy system to a modern platform or migrating from on-premises infrastructure to the cloud. This is a critical phase in the IT Service Management (ITSM) lifecycle, often aligned with ITIL (Information Technology Infrastructure Library) best practices.

At Yntraa cloud, we understand the importance of this transition phase. Our specialists, guided by industry standards and proven methodologies, ensure that new or modified services are seamlessly integrated into operations with minimal disruption—delivering value, stability, and continuity to your business.

Our Standard Approach

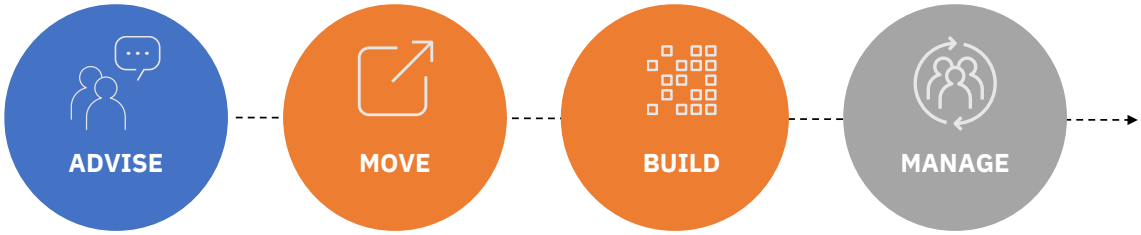

Service Certification & Accreditation

Yntraa Cloud is dedicated to delivering a secure, reliable, compliant and trusted cloud environment. To uphold these standards, Yntraa has obtained a wide range of certifications and accreditations, reflecting its adherence to international security standards and industry best practices. These credentials not only demonstrate Yntraa's commitment to robust data protection and service reliability but also assist customers in meeting their own regulatory and compliance obligations across various industries. Certifications and accreditations are highlighted below.

- **ISO/IEC 20000-1:2018**: Certifies its capability to manage **IT service management systems**, ensuring effective delivery of managed IT services in alignment with business objectives.
- **ISO 9001:2015**: Demonstrates the commitment to maintaining a h**igh level of quality in its service delivery processes,** ensuring customer satisfaction and continuous improvement.
- **ISO/IEC 27001:2013**: This certification ensures that it maintains a robust **Information Security Management System (ISMS)**. It certifies its ability to protect sensitive information and meet international security standards.
- **ISO/IEC 27017:2015 (Cloud Security)**: Focuses on the additional security controls required for cloud services, ensuring a secure cloud environment for its customers.
- **ISO/IEC 27018:2019 (PII Protection)**: Ensures the protection of Personally Identifiable Information (PII) within the cloud. This certification demonstrates Yntraa's commitment to safeguarding customer data privacy.
- **PCI-DSS (Payment Card Industry Data Security Standard):** Yotta's data centers are certified to store and process payment card data in compliance with the rigorous PCI-DSS standards, ensuring secure handling of sensitive financial information.
- **ISO 14001:2015**: Yntraa adheres to international environmental management standards, showcasing its commitment to sustainable and environmentally friendly practices.
- **ISO 45001:2018 (Occupational Health and Safety)**: Reflects Yotta's commitment to ensuring the health and safety of its workforce while delivering services to its customers.
- **MEITY Empanelment: Yotta's data** centers are empaneled by the Ministry of Electronics and Information Technology (MEITY), allowing government bodies and public sector enterprises to host their cloud services in a compliant and secure environment.
- **Tier IV Certification**: Yotta operates Tier IV data centers, providing the highest level of fault tolerance and redundancy. This ensures a reliable and uninterrupted service with 99.995% uptime.
- **Open IX (OIX-2) Certification**: This certification attests that Yotta's data center facilities meet the stringent infrastructure, and operational standards required by the Open IX community for interconnection and data transmission.
- **Hyperscale Innovation in Automation**: It was recognized for its leadership in delivering automated, scalable cloud services.
- **Excellence in Datacenter**: This award acknowledges Yotta's innovative approach to data center architecture and service delivery.

Get started with Yntraa Cloud

Simplify your Processing need and with Yntraa Cloud.