The Large Synoptic Survey Telescope (LSST)[i]

"Space is for everybody. It's not just for a few people in science or math, or for a select group of astronauts. That's our new frontier out there, and it's everybody's business to know about space." - CHRISTA MCAULIFFE (Astronaut – The Challenger Space Shuttle, December 6, 1985)[ii]

Contents

Introduction 3

General Overview 4

The Ground Work – Home Base & Affiliations |Site Location & Description |Cost and Duration of Project 4

Home Base & Affiliations 4

Site Location 5

Site Description, ... 6

Cost and Duration of Project,,,, ... 7

Technical Details,,[x] 8

Telescope 8

Optical Assembly 8

Optics 8

Mirror Design 10

Camera 11

Focal Plane of the LSST 12

The Design of The Detector 13

Specifications at a glance 14

Scientific Details 15

The Science Case – The Dream 15

The nature of Dark Matter, and the understanding of Dark Energy 16

Cataloging the Solar System 17

The Changing Sky 17
Milky Way Structure and Formation 18
Special Techniques 18
Survey Strategy 18
Information Processing Simulated 20
Data Management 20
Pipelines 21
Data Products 21
Data Storage/Processing Facilities 22
Beyond Surveying – Outreach and Education 23
References 24

Introduction

When Charles Messier and Pierre Mèchain created the list of Messier objects in the late 18th century, the first 110 objects to appear were listed out of frustration, separately (or so we are told…)[iii], which were non-comet objects seemingly unwanted in their hunt for comets. It boasts of some deep sky objects [iv] as well, making it one of the most valuable catalogues of all times.

A little over 200 years later, we had moved well beyond naked eye observations and photographic plates, to the first digital survey[v] ,i.e. the Sloan Digital Sky Survey (The Year 2000). About the same time (1996-2001 A.D.), from the conceptual hopes of a Dark Matter Telescope, & the fifth Decadal Report *(Astronomy and Astrophysics in the New Millenium)*, the "Large Aperture Synoptic Survey Telescope", (or now, the Large Synoptic Survey Telescope, i.e. the LSST) was proposed. The Basic Design and Objectives were comprehensively laid out even at this juncture[vi] :

"The Large-aperture Synoptic Survey Telescope (LSST) is a 6.5-m-class optical telescope designed to survey the visible sky every week down to a much fainter level than that reached by existing surveys. It will catalog 90 percent of the near-Earth objects larger than 300 m and assess the threat they pose to life on Earth. It will find some 10,000 primitive objects in the Kuiper Belt, which contains a fossil record of the formation of the solar system. It will also contribute to the study of the structure of the universe by observing thousands of supernovae, both nearby and at large redshift, and by measuring the distribution of dark matter through gravitational lensing. All the data will be available through the National Virtual Observatory (see below under "Small Initiatives"), providing access for astronomers and the public to very deep images of the changing night sky."

For a project that was meant to take the better part of the next two decades, the statement above seems crisp, in hindsight.

General Overview

The Ground Work – Home Base & Affiliations |Site Location & Description |Cost and Duration of Project [vii]

Home Base & Affiliations

The LSST was formally initiated by the LSST corporation (Non-Profit, headquartered in Tucson, Arizona), where nearly 40 institutional members and 34 International Contributors representing 23 countries came together for the advance of science and astronomy. The University of Arizona and The University of Washington being its founding members, the member list of institutions is tall standing, with Google Inc., as one well-known commercial entity.[1] Its partnership with the Association of Universities for Research in Astronomy(AURA) under the National Science Foundation(NSF, U.S.A), and the Stanford Linear Accelerator Center (SLAC) under the Department of Energy (DOE, U.S.A) for its Operations and Data assortment activities , are primary mentions in the list of its associations.

Broadly, the point runners for various part of the project are the below[viii] :

A. AURA to oversee the Site Construction
B. The telescope provided by the National Optical Astronomy Observatory[2]
C. Data operations center to be created by the National Center for Super-Computing Applications[3]
D. The Camera designed and constructed by the SLAC National Accelerator

[1] The Full list of members can be found at https://www.lsstcorporation.org/node/3.

[2] Ground-Based Observatory in the U.S.A

[3] Part of the University of Illinois, U.S.A

The Current LSST team is led by Physicist and Stanford University Professor Steven Kahn, amongst more than 100 Astronomers, Physicists and Engineers spanning the globe.[ix]

Site Location

The LSST site is being constructed at El Penón Cerro Pachón, Coquimbo[x] region in North – Central Chile. The Cerro Pachón ridge[xi], in the foothills of the Andes Mountains will be home to the LSST summit facility, a region also known for the Gemini-South and the SOAR[4] Telescopes. The piece of land is owned by AURA and is located roughly 100 kilometers from the LSST Base facility in the town of La Serena. The region is known[xii] for its exceedingly dry climate making it suitable for Infrared Observations, with the air overhead being very stable, promising excellent seeing.

The Summit Facility Spreads across two Mountain Peaks Amidst a "Main" and an "Auxiliary Telescope, which have been tested for their Rock Strength and Erosion Resistance. Also, further to a detailed fluid dynamic analysis and weather testing, the Main Telescope naturally finds itself at the Highest and the Largest peak, with the Auxiliary one on a smaller peak farther east downhill. The orientation of the facility "steps" down into a saddle area South East of the Main Telescope, being the Service and Operations building. [xiii] (Image 1)

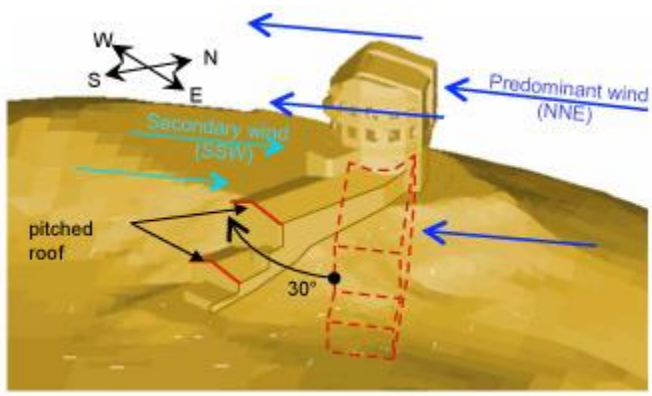

Image 1: Summit Facility and Wind Direction (Courtesy: https://www.lsst.org/about/tel-site/summit)

[4] Southern Astrophysical Research (SOAR) telescope, Cerro Pachón, Chile

Site Description[xiv],[xv]

The Structure of the main telescope includes the telescope pier, a lower enclosure supporting rotating dome, and a 3000 square meter service and operations building. The Auxiliary Telescope is housed in a nearby enclosure.

A well-connected building (Image 2) is meant to provide a protected environment to care for and move the mirrors around, while keeping the temperature-controlled areas separated, to house observatory equipment. Heat generating parts are carefully maintained far enough from the equipment and below the service level, serviced by an 80-ton lift to move the mirrors and camera between the Telescope and the maintenance level. Magnetic motors will be employed to facilitate fast, smooth and quiet slewing, with the challenge being that the telescope must slew 3.5 degrees[xvi] to an adjacent field and settle in 4-5 seconds (i.e. 4 seconds for the structure, and 1 second for the mirror – Total 5 seconds between each exposure). The pier and telescope mount hence need to be very stiff, with an altitude-over-azimuth mount made of steel, hydrostatic bearings on both axes, and, the Pier (16 m Diameter; 1.25 m thick walls). All this, as it may interest a few, is mounted directly to virgin bedrock! (Makes one wonder the scale of mechanics involved!). A sophisticated LSST observatory software scheduler will ensure minimal human intervention during observing, making the facility well automated, under the watch of one operator at the summit.

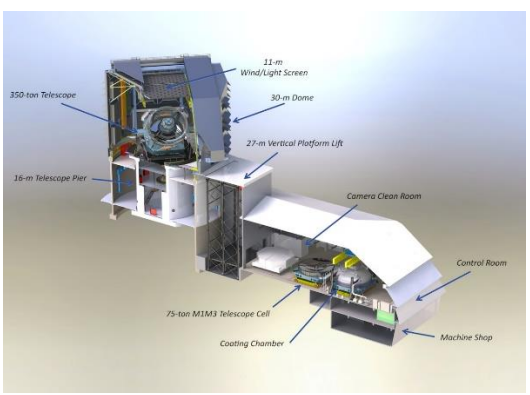

Fig. 2: Telescope Enclosure View(Courtsey:https://www.lsst.org/about/tel-site/summit)

Cost and Duration of Project[xvii],[xviii],[xix],[xx],[xxi]

The start of the LSST as a project can be dated back to 2001 (Fifth Decadal Report, Astronomy and Astrophysics, 2001 – Large Aperture Synoptic Survey Telescope). It was thought of as early as the 1990's with Tony Tyson of the University of California (Davis), and Roger Angel (U of Arizona) visualizing a telescope to survey dark matter and time domain (Dark Matter Telescope, 1996). With $ 473 Million as the upper cap for the entire project[5], AURA being one of the first contributors, the LSSTC was formed in 2003. The Department of Energy (DOE – U.S.A)/SLAC helped with $168 M of the upper cap, for the Camera. Their Web page indicates donations upwards of US$10 M from Charles Simonyi (US$20 M) and Bill Gates, as notable individual contributors. The Mirror Construction began in 2007 and the mirror polishing completed in 2014. Construction of the Telescope and the sight began in the 4th quarter of Financial Year (FY) 2014.As of 2018, May, part of the structure had been completed. The update on June 7th, 2019 on their webpage suggests that the engineering first light is planned for the end of the first quarter of FY 2021, and full science operations will start at the end of FY 2022. All in all, then, this is a project that would have taken almost two decades since its official inception, and roughly 27 years in all.

Fig.3 The LSST Site Under Construction (Courtesy: https://www.lsst.org/about/tel-site)

[5] Major Research Equipment and Facility Construction (MREFC) funding at a not-to-exceed cost of $473M

Technical Details[xxii],[xxiii],[x]

Telescope

The LSST boasts of a unique three-mirror, three lens optical assembly, along with the world's largest Charged Coupled Device, or CCD camera. Magnetic motors, as pointed out earlier, power its movements, and it has adopted an Active Optics system enabling shape modification of the different mirrors to ensure improved image quality as much as possible. The telescopic assembly is equipped with extra measures such as light baffles to tackle ambient light, wind protection, and thermal controls (natural ventilation/day-time cooling) to regulate large variations in temperature. Its design is unique in the 8-m class telescopes, with a very wide field of view, i.e., 3.5 degrees in diameter, or 9.6 square degrees. This coupled with a large aperture makes for a large etendue, or "light-spread", more than roughly 3 times the best existing telescopes, i.e. Subaru and PAN-STARRS.

Optical Assembly

The most preliminary design for the LSST optical assembly came from Roger Angel, Director of the Steward Observatory Mirror Lab, the university of Arizona, and his collaborators, as the "Dark Matter Telescope" design. It is reportedly the latest in a long line of optical assembly improvements i.e., over various telescopes that were directed at removing at tackling two aberrations, spherical and coma, leaving only astigmatism to enable a wider field of view. The LSST, then, as an improvement be using a "three-mirror anastigmat", to cancel astigmatism as well. This will help with sharper images over a very wide field of view, but with compromised light gathering power, due to the secondary mirror coming in the way blocking the telescope aperture.

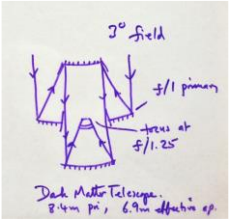

(**Fig.4 Courtesy [xxi]**)

Optics[xxiv]

It consists of 3 non-spherical mirrors, (hence the name 3-mirror anastigmat): The primary mirror being 8.4 m, the secondary, a 3.5 m convex, and the 5.0 m tertiary mirror. It can view a 9.62 square-degree

patch of the sky, a 3.5-degree field of view covering 64 cm diameter flat focal plane. Fig.5 presents an apt reconstruction of the design, with the light from the source shown reflecting off the 3 mirror surfaces, then through the refractor lenses, and captured by the detector in the camera. Fig.6, captures the schematic of the "monolithic" M1M3 primary and tertiary mirrors carved out of a single piece of (Ohara E6 low expansion) glass, making the secondary mirror the largest convex mirror ever made.

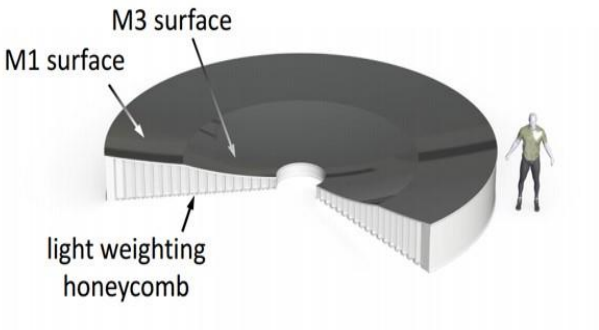

Fig.5 The Three Mirror Assembly and Camera-Detector (https://www.lsst.org/about/tel-site/optical_design) Fig.6 The M1M3 Monolith (https://www.lsst.org/about/tel-site/optical_design)

It is described as a fast-optical system (M1 – f/1.8, M2 – f/1.00, M3-f/0.83) coupled with the large optical area of the mirror, and sensitive detectors to take very deep images with a very large field of view. The length of the system is rather compact at 6.4 m, from the vertex of the secondary to that of the tertiary. As may be evident from Fig.5, that, the primary is ring shaped, or, highly annular that gives it an outer clear aperture of 8.36 m, and an inner diameter of 5.12 m. Effectively then, this accounts for a collecting area of a 6.67 m filled aperture. There is a hole in the secondary mirror to hold the camera readout electronics. In addition, a hole in the tertiary mirror holds equipment for optical alignment. The light from the science source reaches the camera held in the hole in Mirror 2, after reflecting off these mirrors.

The system is optimized to work between the Ultraviolet and the Near-Infra Red electromagnetic wavelength range, following the "u, g, r, i, z, & y". The image quality is better then 0.3 arcseconds for all bands. This is as per calculation done for 80% encircled energy of a point source, i.e., a measure of how well the optical system focuses the gathered light. The same measures to a 0.2 arcseconds or better for 80

% encircled energy for longer wavelengths, i.e., r, i, z, & y. The atmosphere may then limit imaging to around 0.7 arcseconds.

The detector can, at the center capture 63% of an object's light, out to a field radius of 0.7 degrees, with 57% out at full field, at a radius of 1.75 degrees. The etendue, or the light spread, (Aperture area in sq.mts * field of view in sq degrees) is 319.5 m^2deg^2.

Mirror Design[xxv]

As referenced earlier, of the three-mirror set up, the primary and the tertiary mirror, i.e. M1 and M3 here, form a single platform, or a continuous surface. It may be a worthy note for the design enthusiast though, that since the two mirrors must curve differently, a slight cusp is formed where they meet. The single substrate of which they were fabricated, lends them the name M1M3 monolith, (for monolithic substrate).

To ensure such a large structure remains light to move around, and does not take much time for temperature regulation, especially between day and night, the design does not involve a solid support beneath the monolith. Instead, they have adopted a honeycomb structure, which is stiff yet lightweight, to hold the mirror's surface up top. (The design description notes how they used honeycomb mold with the mirror layered on top and as the mirror heated while fabrication, it slipped into the honeycomb mold.) The mirror was casted and finished over a period of 7 years, between 2008 and 2015, at the mirror lab at the University of Arizona's Steward Observatory.

The 3.42 m Secondary Mirror, or M2 here, is the largest convex mirror ever made. A 100 mm-thick, solid blank made of a low expansion glass was used to create the mirror. Actuators maintain the alignment of all three mirrors, with the M2 facing the M1M3 monolith and hangs above them. A Large conical baffle has been employed to avoid any direct reflection from the M3 into the camera which is held inside the setup in the hole in M2. As concerned as one would have been for the monolith's weight, so does one have to be about the M2 and the associated assembly that hangs atop. A solid glass mirror of its size and the assembly would have meant a weight of 11450 lbs or 5205 kg. Instead they removed 1735 lbs of glass

to leave a 19 mm sheet of glass as the mirror's face, with the mirror finally weighing 680 kgs, and the entire assembly is only 52% of its initial weight at 5970 lbs or 2714 kgs. This off course, drastically reduces all sorts of support equipment load, to say the least.

Camera[xxvi]

One more piece of brilliant design, and one more "largest", is the LSST camera, being the largest ever constructed. It is the size of a small car, weighing about 6200 kgs (2800 kgs), at about 5.5 ft by 9.8 ft in dimensions. It is a wide field optical imager with, a large aperture capable of viewing light between 0.3-1 micrometer, i.e., near Ultraviolet to Near Infra Red. A 3.5-degree field of view, as noted earlier, is enabled using a 10-micrometer pixel setup capable of 0.2 arcsecond sampling ensuring optimal pixel sensitivity vs pixel resolution.

A flat image surface with a diameter of approximately 25.2 inches (64 cm), is ensured by a detector format employing a mosaic of 189 16-megapixel silicon detectors, setup on a raft system (21 of them in total), to enable a total of about 3.2 gigapixels. A filter changing mechanism and shutter is placed in the middle of the telescope. The cross-sectional area in here is constrained by optical vignetting, or, "edge-darkening", and the heat dissipation is to be controlled to limit lens-deforming the thermal ingredients in the incoming light. Fig.7 provides a neat schematic of the camera structure.

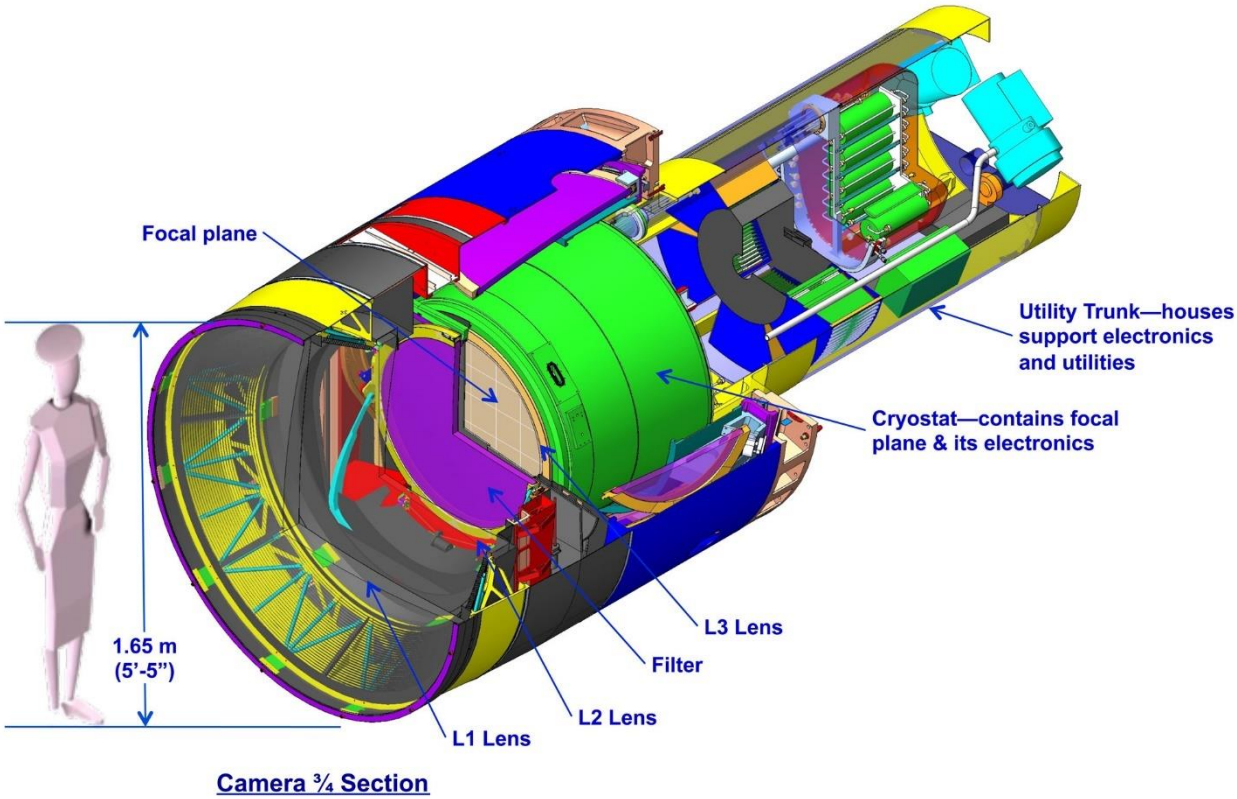

Fig. 7 A schematic of the LSST Camera.(Courtesy: https://www.lsst.org/about/camera)

Focal Plane of the LSST[xxvii]

The light filtering through the 3 mirrors, and corrected by the telescope's lenses, reaches the focal plane, or the focus, more precisely, which makes it the heart of the camera, as it is responsible for capturing light in a form that can be preserved.

Charge-Couple devices (CCD) laid out in an array, which, to achieve the detector performance, operates at about a -100 degrees Celsius, housed in an "evacuated cryostat". The front-end electronics and thermal control for the detector array also form a part of this assembly inside the cryostat. Interestingly, the lens at the cryostat serves both, as the light entrance for the detector, and the vacuum seal for the cryostat. In a similar manner, it must be noted, the camera body lens is housed in a manner to serve as an entrance window and a gas seal for the camera housing, the gas being dry nitrogen filling the body, providing an

environment for the shutter and filter change mechanisms. Five filters, each 75 cm in diameter can be accommodated inside the "filter carousel", and the filters can be swapped robotically in 2 minutes or less.

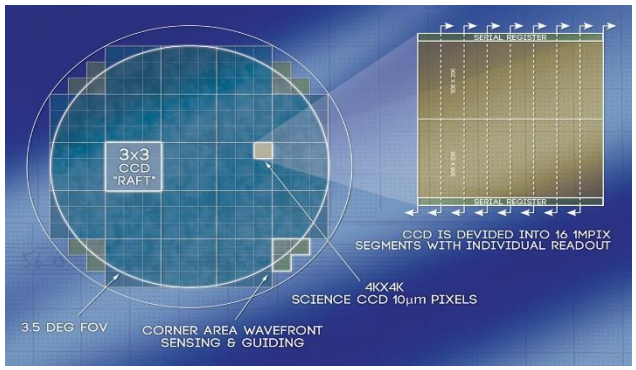

Fig. 8 The Camera's Focal Plane – Schematic

(Courtesy:https://www.lsst.org/about/camera/focalplane)

The Design of The Detector[xxviii]

Platforms called rafts (as noted earlier) have been used to mount the CCD sensors which make up the Camera's focal plane. A total of 21 rafts hold 189 CCDs, with each raft comprising a 3x3 square of sensors.

A CCD itself is built up of 4Kx4K (4096 Horizontal and 4097 Vertical) imaging elements, with 16 outputs, which makes for a total of 144 "channels" per raft, totalling to 3024 channels across the entire focal plane array. The rafts are mounted on a tower (See Fig.9), also holding the front-end electronics for data readout which themselves are mounted under the shadow of a 3x3 sensor to minimize sensor gaps. These are connected to high density and flexible cables to carry data from the sensors to the back-end electronics, where they are converted to a digital format and transmitted to data acquisition hardware and software. There are also "cooling straps" (Fig.9) in place to help prevent "noise" in the sensors, that are strapped to the sensors and cooling planes keeping the raft at about a -100^0 Celsius.

As may be appreciated, each raft then is an autonomous object and can function as a complete camera and is individually controlled by the Observatory Control System. It is possible to group the rafts, wherein each one of them is connected to a single timing and control module, with all rafts being synchronized across the focal plane array.

The rate at which each of the CCDs can collect data, is 8 Mega Pixels Per Second, for a total of 3.2 giga pixels per second.

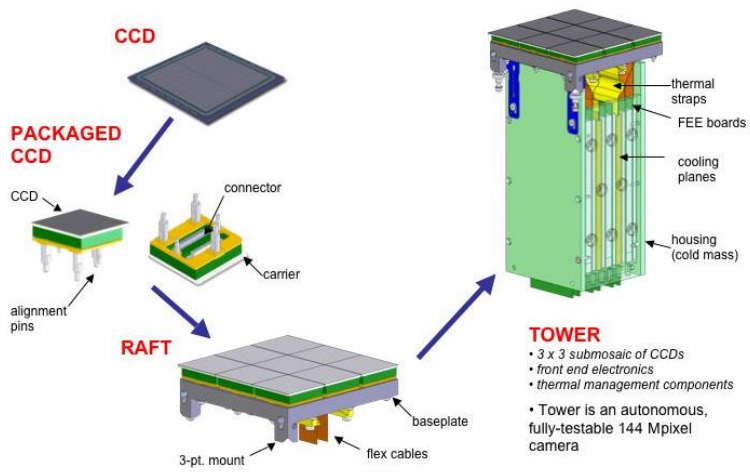

Fig.9. 21 Rafts, each mounted on Towers with electronics and assembled into one unit (Image Courtesy: https://www.lsst.org/about/camera/rafttower)

Specifications at a glance

Focal Plane

- High Quantum Efficiency to 1000 nano meter
- Thick Silicon > 100 nm
- The Point Spread Function Effective at << 0.7 arcseconds
- Fast f/1.2 focal ratio
- Wide field of view @ 3200 sq. cm. focal plane
- High Through put @ > 90 % Fill Factor
- 2 sec fast readout/3024 Output Ports/150 connections per sensor
- Low read noise @ < 10 electrons

Focal Plane Design

- Focal Plane Area is 189 4Kx4K CCDs, each with 16 outputs
- Sensors on identical rafts of 3x3 sensors
- Synchronous clocking of Science CCDs @ 500 Kpix/sec * 16 outputs/CCD * 189 CCDs = 3.2Gpix/sec
- 144 channels/raft which functions as a complete camera
- 16-bit dynamic range handled by single-gain readout

Camera Data Rates

- More than 3Giga Bytes /sec peak raw data
- 1-pixel measures to 2 raw pixels
- 3.2 billion pixels readout in 2 seconds with 15 seconds integration
- The dynamic range at 18 bits/pixels
- >0.6 GB / sec average in the pipeline
- Roughly 15 Terra Bytes of Data Per Night
- 2 Teraflops/sec on an average and 9 Teraflops/sec at the peak

Scientific Details[xxix]

The Science Case – The Dream[xxx]

As noted earlier, the roots of this gigantic dream go back to the 1990s, with the idea of the Dark Matter Telescope (Tony Tyson and Roger Angel). For a project as grandiose as the LSST, its scientific goals are profound, and, the questions it seeks to answer, aplenty:

- "What is the mysterious dark energy that is driving the acceleration of the cosmic expansion?";
- "What is dark matter, and how do its distribution and properties affect the formation of stars, galaxies and larger structures?"

- The formation of milky way and the modification of its present form by mergers
- Nature of the outer regions of the Solar System
- Are there new exotic and explosive phenomenon in the universe yet to be discovered…, and so on…?

The LSST aims to adopt a simple conceptual approach to its surveys – "To conduct a deep survey over a very large area of the sky; do it fast enough to enable repeat images of every part of the sky; pick up multiple bands of the electromagnetic spectrum every few nights, and, well, continue in this mode for 10 years…"

This is, indeed, flatteringly simple an approach. Huge number of astronomical catalogs as have never been compiled before, would result from this simple act, and, then, scientists and enthusiasts alike can have access and begin searching for answers.

On another level though, it behoves the scientific mind to broadly categorise the themes that have driven the LSST design

The nature of Dark Matter, and the understanding of Dark Energy[xxxi],[xxxii]

Several billion galaxies will be probed, with a variety of methods in place to enable cross-checking of results. The process of mapping through space and time, cataloguing of their masses, and the study of their influence on the distortion of space-time will provide the LSST with an insight into the nature of both – Dark Matter, and Dark Energy. It is understood that strong and weak lensing effects provide great insights into understanding dark matter, and the LSST will find thousands of gravitational lenses of all sizes and configurations and help us understanding time and space, and the objects they magnify. The dynamic behaviour of Dark Energy, i.e., how it behaves with cosmic time or with redshift, and, the influence of dark matter on the development of cosmic structure, may be noted as areas of specific interest. Apart from lensing effects, investigations into:

- Galaxy Correlations in 3-d space vs cosmic epoch to evaluate expansion of the universe

- Counts of clusters of dark matter via weak gravitational lensing fused with optical data as effective probes of dark energy
- Supernovae for probing the cosmic era when dark energy becomes prominent
- Simultaneous measurements of mass growth and space-time curvature, to tell whether the recent acceleration is due to dark energy or modified gravity,

Would be the goal of the LSST in its quest to understand these exotic phenomena, broadly.

Cataloging the Solar System[xxxiii]

Solar system studies are expected to get a boost with the enormous power of the LSST discovery capacity. Several million moving objects will be monitored and measured about, (up to 100 times more than the current availability,), and this will encompass orbital, color and variability information. Near Earth asteroids to as far away as the main belt asteroids will be on the "hit list" of observation, and there is also hope that up to 90 % of the Potentially Hazardous Asteroids (PHAs) larger than 140 m in diameter could be detected by the LSST.

The Transient Sky[xxxiv],[xxxv]

Time Domain Astrophysics, i.e. the study of how astronomical objects vary in time, is also expected to get a major boost with the LSST's eyes on the sky. Repeated night sky imaging, and at considerable depths with excellent image quality will reveal new information about known kinds of variable stars and cosmic explosions, while also discovering an entire new class of transient events. One special feature of the LSST, that everyone should be happy about – "Within a minute of a change in the sky, LSST will generate an alert, so that the scientific community can quickly respond and catch such events real time!" For example, the LSST is forecast to discover 3 to 4 million more supernovae than the ones already known, during its 10-year survey

Milky Way Structure and Formation[xxxvi],[xxxvii]

It is expected that the LSST will survey at least half the sky and each surveyed area of the sky could be observed over 100 times. This means mammoth, (and accurate) collection of data that should enable us all to answer some fundamental questions about our home galaxy. The colors and brightness of billions of new stars, motions of millions of them, and other such observations when stitched together will yield a map over 1000 times any of the past surveys when stacked in depth. This, in the least, is expected to help us answer fundamental questions about the structure and evolutionary history of the milky way; and; what might be the fundamental properties of the stars in the neighbourhood of the sun.

Special Techniques

Survey Strategy[xxxviii],[xxxix]

The LSST is expected to conduct a 10-year survey, taking more than five million exposures, amounting to 50 petabytes of raw image data. To understand/decide how the data will be processed, it is important to have an insight into how the surveys will be dealt with. The idea is to produce a deep, time-dependent multi-color movie of 30,000 square degrees of the sky. The "Survey Strategy" then, is concerned with the sequence, (or as they term it "Cadence") with which the exposures are made.

Data will be taken in back to back pairs of 15 second exposures to aid in cosmic ray-injection. One pair refers to a "single visit", i.e., a single observation of a ten square degree field through "one particular" filter. The survey designs are then constrained by ordering these visits in time and allocating them among its six filters so as to maximize its return on the scientific goals in a fixed survey duration. For example, the four primary science objectives that we noted under the science case of the LSST, i.e. Dark Matter and Dark Energy, Inventory of the solar system, the changing sky, and mapping the milky way, form the basis/constraints for synthesizing the requirements for a survey.

This leads to the application of their Operations Simulator (Or OpSim) that has been created to design surveys based on various science goals , or science driven desirables.[xl]. As an example, again, the

operations strategies (cadences) have been analysed well in advance, generated by the OpSim, balancing several proposals:

- Wide, Fast, Deep (WFD): 85-95% of observing time, 18000 square degrees of sky, spanning a declination from about -65 to +65 degrees. The observing pairs spaced ~ 40 minutes apart, and balance the six filters, i.e., *ugrizy*, observing each field for roughly 3 days.
- North Ecliptic Spur (NES): An extension to the WFD to reach a higher airmass. Does not include the *uy* filters.
- Galactic Plane: Regions of high confusion due to density of stellar sources. Lesser total exposures per field than the WFD and no pairing. Regions limited by galactic latitude $b < (1 - L/90^0)$ for $0^0 < L < 90^0$, and analogously (mirror image) for $270^0 < 360^0$.
- South Celestial Pole (SCP): Higher airmass extension to WFD, south of declination -65 degrees. No pairing, fewer exposures, but covers the *ugrizy*.
- Deep Drilling Fields (DD): Single pointings observed in extended sequences; Various filter combinations to ensure near-simultaneous color information is available for variable and transient objects.

The operations simulator incorporates[xli] detailed models, i.e. considers site conditions and hardware performance and analyses algorithms for scheduling observations. For example, the scheduling includes analyses of the observing conditions at Cerro Tololo, and after each visit, all possible next visits are assigned a score according to a set of scientific requirements, depending upon current and past conditions and history of the survey…And so on…

The LSST is not operational yet. Just like the Operations Simulator hence, it has other simulations as a part of a simulations framework that exemplify how it will issue alerts, process catalogs, process and publish images, and analyze datasets. A brief description follows:

Information Processing Simulated[xlii]

- AlertSim: Generates alerts similar to the alerts the LSST will generate for any changes detected in the sky and transmit them to the world-wide community within 60 seconds of taking the exposure.
- CatSim: Properties and distributions of stars, galaxies, and asteroids simulated as a catalog
- PhoSim: The photon simulator, generates representative images of the sky
- GalSim: An open source package for simulating images of stars and galaxies, basis the analysis of weak lensing
- MAF (Metrics Analysis Framework): Analyse the outputs of the operations simulator, hence, similar to that of observations, to understand the science and technical performance of the LSST survey strategy.

Data Management[xliii],[xliv]

The LSST will produce about 20 terabytes of raw data per night. Its data management is architected in three layers:

1. Infrastructure Layer: Consisting of computing, storage, and networking hardware and system software;
2. Middleware Layer: Distributed Processing, data access, user interface and system operations services
3. Applications layer: Data Pipelines, Data Products and the Science Data Archives.

One can install the "pipeline" software to access the data, and pipelines are what process the images to produce catalogues, which are then made accessible to the community via open interfaces in a "Virtual Observatory Model". The pipelines can be categorized as being static, or "near-real time" depending upon the latency and throughput deadlines the pipeline holds. For example, near real time pipeline would include data quality assessments to provide feedback to telescope operations, while static pipeline would include deep image co-addition and object cataloging etc.

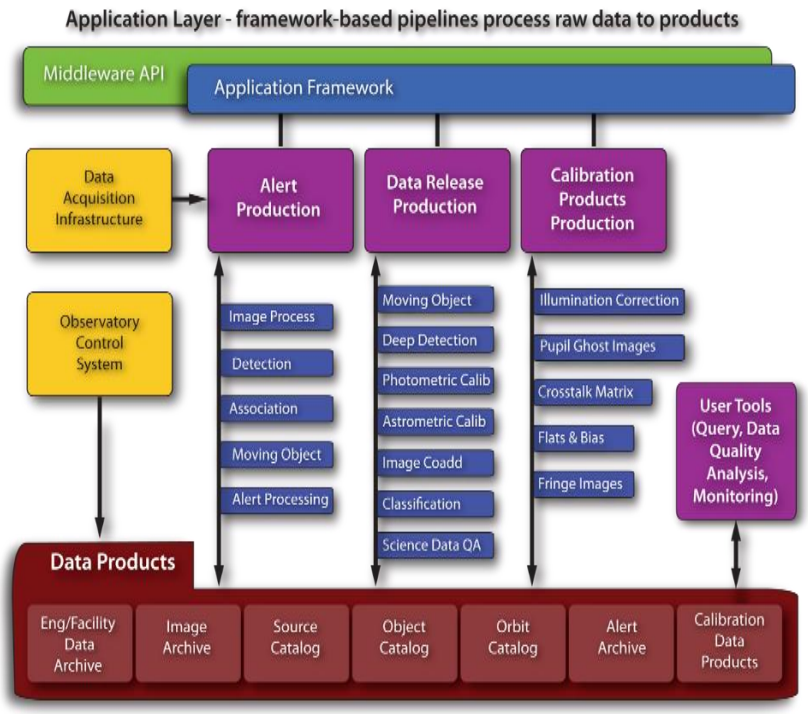

Fig.10 Data Management Pipelines

(Image Courtesy: https://www.lsst.org/about/dm)

Pipelines[xlv]

1. *Nightly Pipelines* to be based on image subtraction, highlighting differences between 2 exposures of the same field. They are supposed to rapidly detect transient events of interest and send alerts too the community within 60 seconds
2. *Data Release Pipelines* release data products that are fully analyzed, for example, those that have measured very faint objects and cover long time scales.
3. *Calibration Products Pipeline*, as the name suggests, to produce a wide variety of "calibration data "required by other pipelines

These pipelines can work on small and medium sized platforms and, also make efficient use of Linux clusters with thousands of nodes.

Data Products[xlvi]

Three main categories signify the LSST data products:

1. *Prompt*: The ones generated every night, with a 60 second latency, source catalogs derived from difference images, AND, image data products released with a 24-hour latency.
2. *Data Releases:* To be made available annually as the result of the "coherent processing" of the entire science data to date
3. *User Generated:* To originate from the community, which will also include project teams. This will also arrange to provide users and groups to maintain access control over the data products they create enabling them to have limited distribution, or to share with the LSST community.

Their scientific database, per se, will include a source catalog (7 trillion rows), object catalog with 37 billion rows and 200 attributes each, a "moving" object catalog with 6 million rows, the 60 seconds "alerts database", and , Calibration+Configuration+Processing and provenance metadata.

Data Storage/Processing Facilities[xlvii]

From the point of data acquisition, all the way to broad user access, the LSST lists a few places that will be of prime importance in this regard.

- A mountain summit and "base" facility which comprises the mountain telescope site, (Data Acquisition to interface with other subsystems here), and, the base facility where data is stored and also routed on the archive center
- A supercomputing class data center forms the archive facility. Complete processing and reprocessing and permanent storage to happen here. IN_2P_3 France is the host for another full copy, where, also, half the data "release" processing will be done. Community distribution will be fed mainly from the archive facility
- Data access centers planned for broad user access, following a two-tiered access model defining the capacity and response available.
- Two project funded data access centers co-located with the archive and the base facilities; Will serve to provide disaster recovery, and, open and public interfaces to data products.

Beyond Surveying – Outreach and Education[xlviii]

While predominantly a survey project, the LSST claims to revolutionize public and school education and outreach. It has notable schemes to allow data access and usage for training, single webpage access to their interface, etc.

They plan to reach out to the world under four different categories:

1. General Public: There would be an Education and Public Outreach (EPO) website featuring news about LSST discoveries, profiles of scientists and engineers and their work. Non-Specialists will be provided opportunities to explore LSST data, facilitating learning about how data contributes to science and discovery.
2. Formal Educators: They are also developing an online, data-driven classroom which would cover commonly taught topics in physics and astronomy.
3. Planetariums and informal science centers: A gallery of high-end multimedia visualizations will be accessible for download and integration into exhibits and presentations.
4. Citizen scientist researchers: Researchers who create citizen science projects using LSST data, shall be supported, along with a dedicated project building tool, allowing citizen scientists to participate in the discovery process enabled by LSST.

References

[i] https://www.lsst.org/
[ii] https://er.jsc.nasa.gov/seh/quotes.html
[iii] *"Original Messier Catalog of 1781"*. *10 November 2007.*

[iv] *Garner, Rob (18 December 2018). "NASA". NASA. Retrieved 17 January 2019.*
[v] *Djorgovski, S. George, Ashish Mahabal, Andrew Drake, Matthew Graham, and Ciro Donalek (2013). "Sky surveys". Planets, Stars and Stellar Systems. Springer Netherlands. pp. 223–281. arXiv:1203.5111. doi:10.1007/978-94-007-5618-2_5. ISBN 978-94-007-5617-5.*
[vi] *Astronomy and astrophysics in the new millennium*. Washington, D.C: National Academy Press. 2001. ISBN 978-0-309-07312-7.
[vii] https://www.lsst.org/about/organization
[viii] *"World's largest digital camera gets green light". 2011-11-08. Retrieved 2012-04-07./*
[ix] https://www.lsst.org/about/team, https://en.wikipedia.org/wiki/Steven_Kahn
[x] https://en.wikipedia.org/wiki/Large_Synoptic_Survey_Telescope#History
[xi] https://www.lsst.org/about/tel-site/summit
[xii] https://en.wikipedia.org/wiki/Cerro_Pach%C3%B3n
[xiii] https://www.lsst.org/about/tel-site/summit
[xiv] https://www.lsst.org/about/tel-site/summit
[xv] https://www.lsst.org/about/tel-site
[xvi] Neill, Douglas R.; Krabbendam., Victor L. (2010). *LSST Telescope mount and pier design overview*(PDF). Ground-based and Airborne Telescopes III. **7733**. International Society for Optics and Photonics. pp. 77330F. Bibcode:2010SPIE.7733E..0FN. doi:10.1117/12.857414.
[xvii] Kahn, Steven; Krabbendam, Victor (August 2014). "LSST Construction Authorization" (Press release). Lsst Corp.
[xviiixviii] https://www.lsst.org/about/fact-sheets
[xix] https://www.lsstcorporation.org/node/5
[xx] https://www.aerospace-technology.com/projects/large-synoptic-survey-telescope-lsst/
[xxi] The Large Synop.c Survey Telescope (LSST) Construc.on Status – 2018, Ground-Based and Airborne Telescopes VIII10700-25, Victor L Krabbendam,LSST Project Manager,12 June 2018
[xxii] https://www.lsst.org/about/tel-site
[xxiii] https://www.lsst.org/about/tel-site/optical_design
[xxiv] https://www.lsst.org/about/tel-site/optical_design
[xxv] https://www.lsst.org/about/tel-site/mirror
[xxvi] https://www.lsst.org/about/camera
[xxvii] https://www.lsst.org/about/camera/focalplane
[xxviii] https://www.lsst.org/about/camera/rafttower
[xxix] https://www.lsst.org/science
[xxx] https://www.lsst.org/science
[xxxi] https://www.lsst.org/science/dark-matter
[xxxii] https://www.lsst.org/science/dark-energy
[xxxiii] https://www.lsst.org/science/solar-system
[xxxiv] https://www.lsst.org/science/transient-optical-sky
[xxxv] https://www.lsst.org/science

[xxxvi] https://www.lsst.org/science
[xxxvii] https://www.lsst.org/science/mapping-milky-way
[xxxviii]arXiv:1708.04058v1 [astro-ph.IM] 14 Aug 2017
[xxxix] https://www.lsst.org/content/lsst-information-scientists
[xl] arXiv:1708.04058v1 [astro-ph.IM] 14 Aug 2017, Versionnn 1.0 Phil Marshal et. al. Science Driven optimization of the LSST observing strategy
[xli] LSST System Performance, Steven M Kahn et.al, https://www.lsst.org/scientists/scibook, Chapter 3
[xlii] https://www.lsst.org/scientists/simulations
[xliii] https://www.lsst.org/about/dm
[xliv] https://www.lsst.org/about/dm/data-products
[xlv] https://www.lsst.org/about/dm/pipelines
[xlvi] https://www.lsst.org/about/dm/data-products
[xlvii] https://www.lsst.org/about/dm/facilities
[xlviii] https://www.lsst.org/about/epo