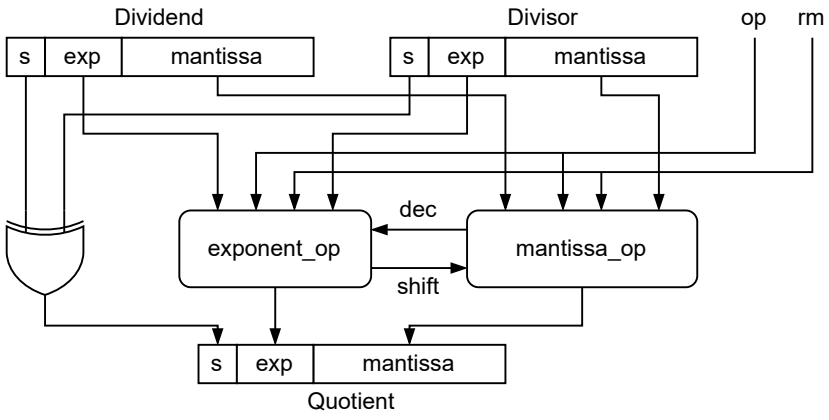
Dividend
s
exp
mantissa
Divisor
s
exp
mantissa
op
rm
dec
exponent_op
mantissa_op
shift
s
exp
mantissa
Quotient

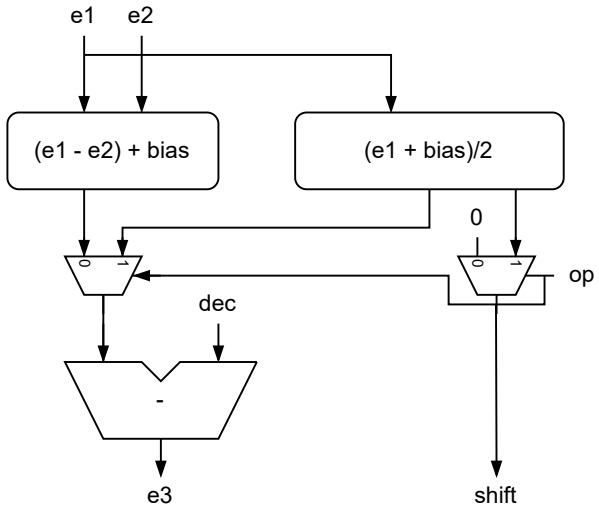
e1
e2
(e1 - e2) + bias
(e1 + bias)/2
0
op
dec
-
e3
shift

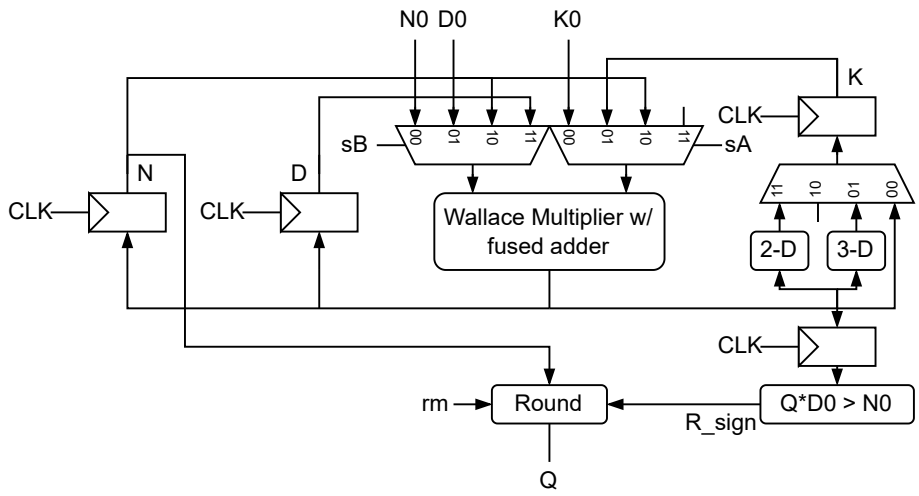

Division Iterations

1. Calculate N from K0 and N0.
2. Calculate D and K from K0 and D0.
3. Iterate N: calculate N from K and previous N.
4. Iterate D and K: calculate D and K from previous D and K.
5. Iterate N.
6. Iterate D and K.
7. Iterate N.
8. Iterate D and K.
9. Iterate N.
10. Iterate D and K.
11. Iterate N to compute the quotient Q.
12. Compare Q*D0 to N0 to determine the sign of the remainder and round Q.

Square Root Iterations

1. Calculate N = N0*K0 and store in register N.
2. Calculate K^2 from K0 and store in register K.
3. Calculate D = N0*K^2 and store in register D. Simultaneously calculate (3-D)/2 and store in register K.
4. Iterate N: calculate N = N*K.
5. Iterate K^2: calculate K^2 from K.
6. Iterate D and K: calculate D = D*K^2 and K = (3-D)/2.
7. Iterate N.
8. Iterate K^2.
9. Iterate D and K.
10. Iterate N.
11. Iterate K^2.
12. Iterate D and K.
13. Iterate N.
14. Iterate K^2.
15. Iterate D and K.
16. Iterate N to determine the result.