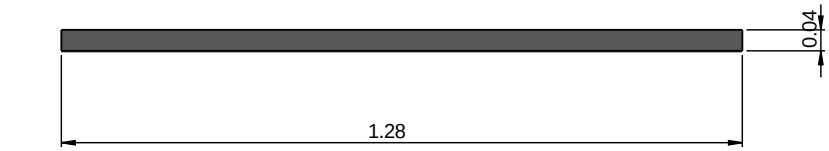

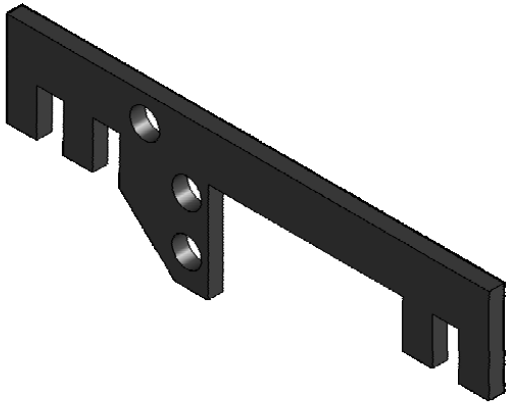

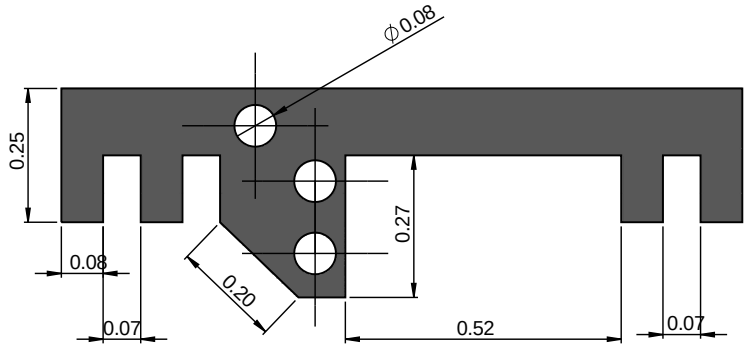

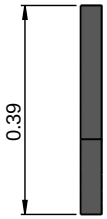

HUGANIR LAB	NON-VISUAL CORTEX HEADPOST	SCALE 5 : 1	DWG. NO. 1	DATE 7/28/18
		QTY. REQ. 1	UNITS INCHES	MATERIAL STEEL