ISBN 978-1-6654-3986-2

Design of Digital Architecture for Custom Implementation of Cordic Algorithm

Putchala Santosh Kumar; Prajapati Vatsalkumar; Snehasis Dolui; Nadeem Khan; A. Arockia Bazil Raj
Department of Electronics Engineering,
Defence Institute of Advanced Technology, Pune-411025, India
santoshkumar7268674@gmail.com; vatsal.prajapati@yahoo.com; snehasis1898@gmail.com; nadeem0410khan@gmail.com; brazilraj.a@diat.ac.in

2021 International Conference on System, Computation, Automation and Networking (ICSCAN) | 978-1-6654-3986-2/21/$31.00 ©2021 IEEE | DOI: 10.1109/ICSCAN53069.2021.9526417

***Abstract*—An efficient way of obtaining trigonometric, hyperbolic, linear, and logarithmic is provided by the CORDIC algorithm. In this algorithm bit shifting operation replaces multiplication and iterative addition will result in accurate values of such trigonometric functions. Not only it is saving the area but also improves the throughput. This algorithm has become a widely researched area in the field of vector rotated DSP applications. This paper explores the basic CORDIC algorithm and implements it on FPGA using VHDL coding. Uniqueness in the proposed CORDIC algorithm is that 4-bit input will cover all the values of angle in four quadrants having a resolution of 22.5°. Using recent technology, we can have to utilize more hardware in order to achieve speed constraints. A serial iterative CORDIC uses less hardware with more latency so, here to have high throughput parallel iterative hardware is used. But The bit-parallel variable shift shifters require high fan-in. As FPGA provides both flexibility as well as speed it is much better choice for implementing CORDIC algorithm. The proposed CORDIC algorithm is simulated on Vivado 2019.2 and implemented on the Xilinx Spartan 3E board. The simulation results which are shown below verify the authenticity and validity of the designed CORDIC algorithm.**

***Keywords*—CORDIC Algorithm, Linear iterations, Rotation mode, Trigonometric functions, hyperbolic functions.**

I. Introduction

CORDIC stands for **CO**ordinate **R**otation **DI**gital **C**omputer. In 1959, Jack E. Volder came up with this algorithm which is used for solving the trigonometric relationships involved in plane coordinate rotation and conversion from rectangular to polar coordinates [1,2]. Later on, Walther proposed the unified algorithm for various coordinate systems i.e., circular, linear and hyperbolic. Robust technique, low-complexity and highly efficient CORDIC algorithm has attracted many real time applications, at initial days it was used in navigation problems [3,4]. Later signal processing, adaptive filters, biomedical signal processing, neural networks, matrix-based computation (QR decomposition & SVD) started using it [5,6].

This paper attempts to execute the CORDIC algorithm (iterative algorithm) using FPGA. FPGA platform has been used to implement the same because of its speed and flexibility of ASICs and microprocessors respectively which modern computer lags in greater extent. Using FPGA, the iterative structures are implemented smoothly [7.8]. There exist three configurations to operate CORDIC algorithm. (i) linear (ii) circular (iii) hyperbolic, and each of them functions either in vectoring mode or rotation mode. In rotation mode, the input vector is revolved/rotated by specific angle, on the other hand in vectoring mode, the input vector is rotated to the x-axis whilst storing the angle of rotation to be done [9]. CORDIC algorithm works in cycle using the shift and adds operations. Due to which this algorithm does not cover much space on the hardware. Thus, it provides very quick operation [10,11].

A. Basic CORDIC Algorithm

As discussed above, CORDIC has two modes of operation

1) **Vectoring**:- In this mode the coordinates (x_0,y_0) are rotated till y_0 converges to zero i.e., the initial and final vector coordinates are present and the further work is to determine the difference angle between the vectors [12,13].

2) **Rotation**:- This paper gives detailed analysis on rotation mode of CORDIC. The new vector v' with coordinate (x', y') is obtained by rotating vector with coordinate (x, y) through an angle θ_i.

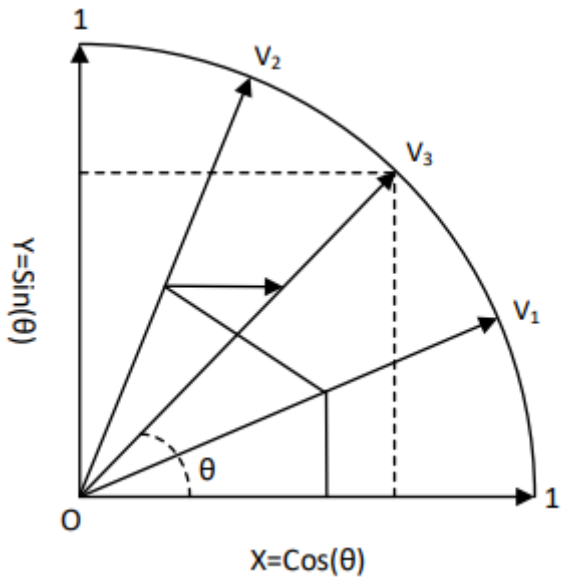

Fig. 1 – Illustration of co-ordinate rotation

From the basic rotation and transform equation.

$$X_{i+1} = X_i \operatorname{Cos}(\theta_i) - Y_i \operatorname{Sin}(\theta_i)$$

$$Y_{i+1} = Y_i \operatorname{Cos}(\theta_i) + X_i \operatorname{Sin}(\theta_i)$$

Authorized licensed use limited to: ULAKBIM UASL - CUKUROVA UNIVERSITESI. Downloaded on November 06,2022 at 11:32:03 UTC from IEEE Xplore. Restrictions apply.

$$X_{i+1} = \mathrm{Cos}(\theta_i)\left(X_i - Y_i \frac{\mathrm{Sin}(\theta_i)}{\mathrm{Cos}(\theta_i)}\right)$$
$$Y_{i+1} = \mathrm{Cos}(\theta_i)\left(Y_i + X_i \frac{\mathrm{Sin}(\theta_i)}{\mathrm{Cos}(\theta_i)}\right)$$
$$X_{i+1} = \mathrm{Cos}(\theta_i)(X_i - Y_i\ \mathrm{Tan}(\theta_i))$$
$$Y_{i+1} = \mathrm{Cos}(\theta_i)(Y_i + X_i\ \mathrm{Tan}(\theta_i))$$

The above equation can be rewritten as follows where $K_i = \cos\theta_i$

$$X_{i+1} = K_i(X_i - Y_i\ \mathrm{Tan}(\theta_i))$$
$$Y_{i+1} = K_i(Y_i + X_i\ \mathrm{Tan}(\theta_i))$$

Here θ is angle of rotation and , $\emptyset$ is actual angle.
To simplify the above equations, we take $\tan(\theta) = 2^{-i}$. where i is index of iteration [14,15]. This assumption makes the θ to variate on the order of $\tan^{-1}(2^{-i})$, the advantage is that the execution of (1), (1/2), (1/4),..(1/8) can be performed just by right shifting in digital domain [16,17].

$$X_{i+1} = X_i - d_i\ Y_i 2^{-i}$$
$$Y_{i+1} = Y_i + d_i\ X_i 2^{-i}$$
$$\theta_{i+1} = \theta_i - d_i \tan^{-1}(2^{-i})$$

where θ_{i+1} is the succeeding theta, θ_i is the present theta, and d_i is the direction factor. For all value of i, we will get the value of $\tan^{-1}(2^{-i})$ from the arctan LUT as shown in Table I. The d_i which decides the direction of rotation can be either positive or negative [18,19]. That means if the $\emptyset$ is greater than θ, then add the value of θ from the look-up table to the present theta; therefore, d_i should be positive (+1). If θ is above the $\emptyset$, then subtract the value of theta from look-up table to present theta; hence, the d_i should be negative (−1). The value of K_i is represented as $K_i = \cos(\theta_i)$. As θ is taken to be $\tan^{-1}(2^{-i})$; hence, $K_i = \cos(\tan^{-1}(2^{-i}))$. This is broken into simple parts as [20,21]

$$\cos(\tan^{-1}(2^{-i})) = \left(\frac{1}{\sqrt{1+\tan^2(\tan^{-1}(2^{-i}))}}\right)$$
$$\cos(\tan^{-1}(2^{-i})) = \left(\frac{1}{\sqrt{1+(2^{-2i})}}\right)$$

From above equation it is observed that K_i only depends on the value of i-iteration index, so the scaling factor K_i is constant for the rotation in any direction [22,23].

TABLE I
ITERATIVE EQUATIONS OF THE CORDIC ALGORITHM

Coordinate Rotation	Iterative Equation	Direction Function (d_i)
Theta (θ)	$\theta_{i+1} = \theta_i - d_i \times \tan^{-1}(2^{-i})$	$d_i = -1$ $if\ \theta > \emptyset_i$ $d_i = +1$ $if\ \theta < \emptyset_i$
X	$X_{i+1} = X_i - d_i \times Y_i \times 2^{-i}$	
Y	$Y_{i+1} = Y_i + d_i \times X_i \times 2^{-i}$	

So for different values preceding equation can be rewritten as

$$K_i = \prod_{i=0}^{N-1}\left(\frac{1}{\sqrt{1+(2^{-2i})}}\right)$$

TABLE II
ORDER OF ROTATION ANGLE

i	$\theta = \tan^{-1}(2^{-i})$	$\tan(\theta_i)$
0	$\tan^{-1}(1) = 45^o$	1
1	$\tan^{-1}(2^{-1}) = 26.563^o$	1/2
2	$\tan^{-1}(2^{-2}) = 14.036^o$	1/4
3	$\tan^{-1}(2^{-3}) = 7.125^o$	1/8
4	$\tan^{-1}(2^{-4}) = 3.576^o$	1/16
5	$\tan^{-1}(2^{-5}) = 1.79^o$	1/32
6	$\tan^{-1}(2^{-6}) = 0.895^o$	1/64
7	$\tan^{-1}(2^{-7}) = 0.448^o$	1/128
8	$\tan^{-1}(2^{-8}) = 0.224^o$	1/256
9	$\tan^{-1}(2^{-9}) = 0.112^o$	1/512
10	$\tan^{-1}(2^{-10}) = 0.056^o$	1/1024
.	.	.

TABLE III
ANGLE ASSIGNMENT

4-bit data	Angle values
0000	0°
0001	22.5°
0010	45°
0011	67.5°
0100	90°
0101	112.5°
0110	135°
0111	157.5°
1000	180°
1001	202.5°
1010	225°
1011	247.5°
1100	270°
1101	292.5°
1110	315°
1111	337.5°

Authorized licensed use limited to: ULAKBIM UASL - CUKUROVA UNIVERSITESI. Downloaded on November 06,2022 at 11:32:03 UTC from IEEE Xplore. Restrictions apply.

By putting the values of i starting from 0 to N-1 the $K_i = (0.7071) \times (0.8944) \times (0.9701) \times (0.9923) \times (0.9981) \times (0.9995) \times (1) \times (1) \ldots$
$K_i \approx 0.6073$

B. Existing Architectures for Implementation of CORDIC algorithm

- **Serial Architecture**: - The serial iterative architecture makes use of serial add/sub circuit, three shift registers and a serial Read Only Memory (ROM). Length of each shift register is equal to the word width [24,25]. In this design, for each of the n iterations m clocks are required, where m represents precision of the adders. During the operation, the load multiplexers are selected for m clock periods to initialize the x, y and z registers (while initializing x and y can be loaded parallel also). After loading the data, it is shifted right through the serial adder- subtractors and returned to the register [26,27]. Each iteration will take time of m clocks to return the result back to the register.
- **Parallel Architecture**: -This architecture utilises multiple instances of iterative CORDIC. This configuration implements the shift-add/sub operations in parallel using an array of shift-adder/subtractors. The size of a parallel architecture is purely dependent on the number of iterations [28,29]. The frequency of operation for Parallel architecture is lesser than the frequency of operation of iterative architecture. But this is the case with a single iteration. While dealing with a cascade of inputs, the parallel structure turn out to be more competent since the throughput of parallel structure is much greater than that of iterative structure. The constant shifters are used here, are implemented in the wiring, so that the hardware is cutdown [30,31].
- **Pipelined Architecture**: -In this architecture, for each iteration unique shifter is provided that is the iteration process is unfolded. In this architecture, the shifters can be implemented by hardwiring as it performs fixed shifts, which terminates the need for iteration counter [32]. The LUTs for angle accumulation are therefore distributed as constants to each adder-subtractor in the angle accumulator chain. Instead of storing angles in memories, the constants are hardwired. In this architecture, it takes n clock cycles to give first output and then the next set of data output is computed in the upcoming clock cycle [33]. Hence it has high throughput. Initially the XOR gate and adder-subtractor block are responsible for the pre-rotation at the very first stage. Then the output is forwarded to the next succeeding stage and the result is evaluated at the end of every stage respectively and the process goes on [34,35].

C. Proposed Custom Algorithm for Implementation

1. Input the 4-bit data. Accordingly assigning the angles, as 2^4 =16 combinations are possible so resolution of $360^o/16 = 22.5^o$ is available (Table III).
2. Values of X, Y and $\emptyset$ are assigned to start the iterations.
3. At the end of nth iteration θ will result very close to 0° and magnitude of cosine and sine is obtained for all quadrants.
4. 2's compliment of each cosine and sine value is calculated for the purpose of providing correct sign for the cosine and sine values of respective quadrants [36,37].
5. Actual magnitude along with sign are allocated according to the quadrants. For example: $\cos(135^o) = -0.7071$(2's compliment value is used, from step 4) & $\sin(135^o) = 0.7071$(magnitude value is used, from step 3).

Advantages

- This custom algorithm has only addition, subtraction, bit-shifting operation and no multiplication [38].
- Only shift registers, adders and look–up table (ROM) are involved.
- Ensures minimal use of gates for hardware implementation.

Above features gives various advantages over cost, complexity of circuit design, power consumption and area when compared to processors such as DSP multipliers [39].

II. Digital Implementation

Digital implementation of the CORDIC algorithm is shown in [Fig. 2]. The onboard clock has the frequency of 50 MHz so, DCM (digital clock manager) is used to step down the frequency as per requirement. The initial assignment is given by assigning theta as 0. In this paper, iterations are started by assigning values of 0.6073 and 0 respectively to x and y. As input z is of 4 bits, register z_ip is used to store values of different angles for respective inputs [1,40]. In rotation mode of operation, the order of rotating angle is stored in arctan LUT [Table I] which is updated based on the number of iterations as it goes on. The basic step prior to every iteration is to get the direction in which rotation going to happen. So a comparator is used to decide the direction of rotation along with d_i. This d_i would decide whether addition or subtraction must take place for calculating the x_array(i), y_array(i), and z_array(i) so as to continue with the next iteration. These values will be stored in the shift registers x_array, y_array, z_array respectively just after every iteration gets completed. The clock latency for this algorithm is 16 clock cycles. After 16 clock cycles, the values generated from the last iteration is then assigned as cos_mag and sin_mag respectively. As the iterations go on the value of theta will also change accordingly to the direction of d_i and at the end of the 16th iteration, it will reach the given angle [3,41]. These magnitude values contain only values of cos & sin of angles present in the 1st quadrant only so by taking 1st quadrant values as reference the remaining quadrant values are obtained with proper sign accordingly [4,42].
These magnitude values are given to the 2's complement block where negative sign is attached to

Authorized licensed use limited to: ULAKBIM UASL - CUKUROVA UNIVERSITESI. Downloaded on November 06,2022 at 11:32:03 UTC from IEEE Xplore. Restrictions apply.

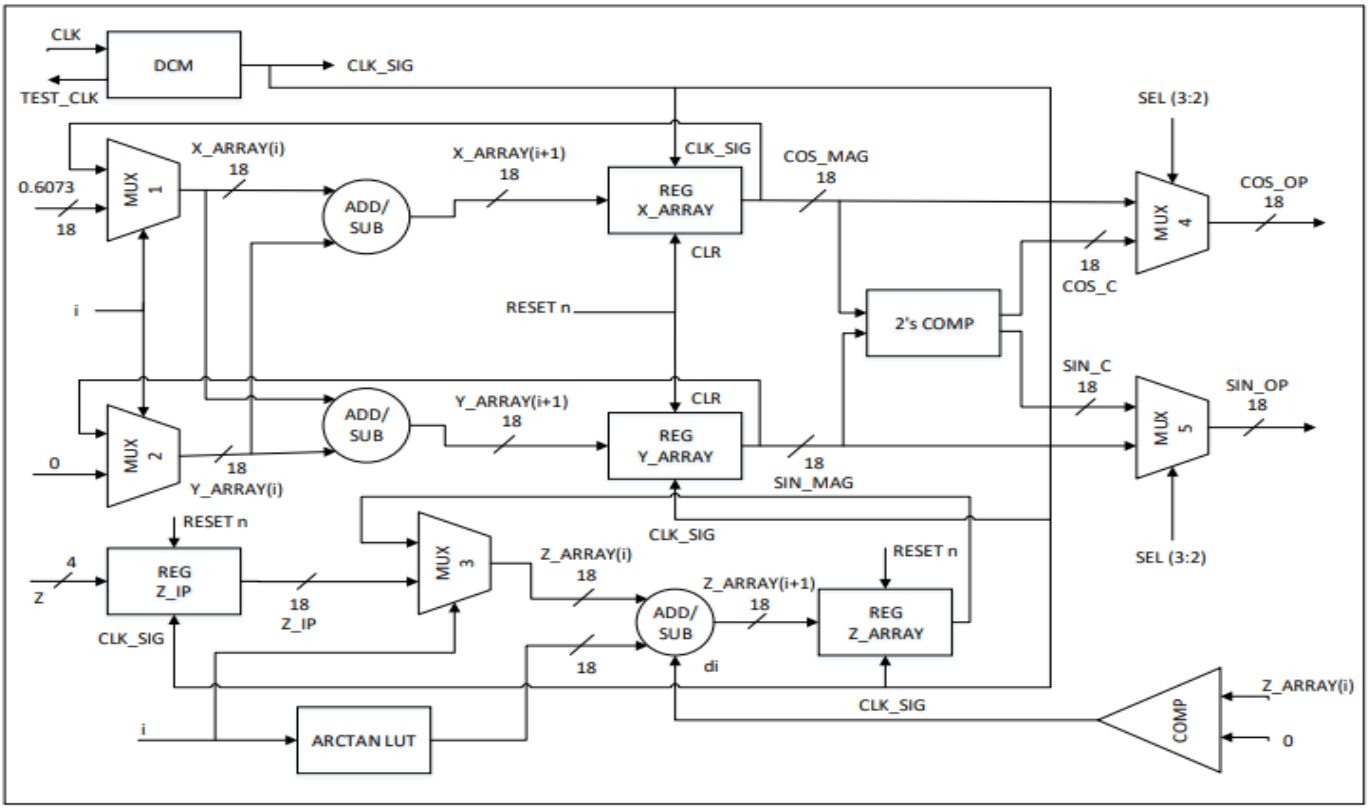

Fig. 2- Digital Implementation of proposed custom algorithm

the cos_mag and sin_mag. The output of the 2s complement block is cos_c, sin_c. Now cos_mag, cos_c given to a multiplexer and sin_mag, sin_c given to another multiplexer whose select pins are first two bits of vector z which decides the quadrant in which the given angle is present. So, finally the values obtained are cos_op and sin_op. This algorithm works for all angles both positive and negative. The custom CORDIC algorithm is implemented and the results are depicted in the simulation results section.

III. Simulation Results

The code is compiled using Vivado 2019.2 software to modify and debug the source code. After verification of code in terms of error the ModelSim is used to simulate the same for getting waveforms. After evaluation of expected waveforms then it is proceeded for real-time debugging using the Spartan 3E FPGA board. The outputs present in this paper are in scaled format. The latency of this custom design of the CORDIC algorithm is 16 clock cycles. In [Fig. 3] for input z=0000, the corresponding value of the angle as per table [3] is 0° and it lie in the 1st quadrant so, the value of cos_mag is assigned to cos_op and sin_mag is assigned to sin_op.

In [Fig. 4] for input z=0101, the corresponding value of angle as per table [3] is 112.5° which lie in the 2nd quadrant so, the reference angle of 112.5° in the 1st quadrant is 22.5° (as 112.5°= 90° +22.5°) so, the magnitude value of cos and sin of 112.5° and 22.5° would be same but the cos value of 112.5° would be negative so the cos_op is assigned to be the 2's complement of cos_mag and sin_mag is directly assigned to sin_op.

In [Fig. 5] the given input is z=1010, from table [3] we can see that the corresponding angle value is 225° which lie in the 3rd quadrant so, the reference angle of 225° is 45°(as 225°= 2×90° + 45°) so, the magnitude value of cos and sin of 225° and 45° would be same but the cos value and sine value of 225° would be negative hence the cos_op is assigned to be the 2's complement of cos_mag and sin_op is assigned to be the 2's complement of sin_mag.

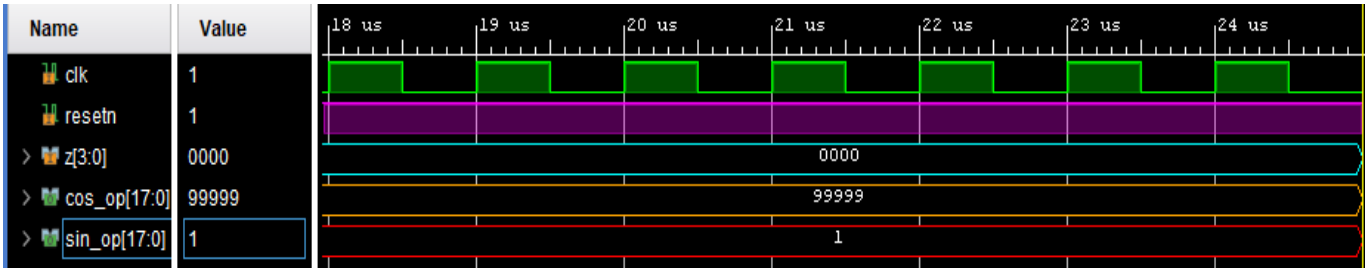

Fig. 3 - Simulation result for input z=0000

Authorized licensed use limited to: ULAKBIM UASL - CUKUROVA UNIVERSITESI. Downloaded on November 06,2022 at 11:32:03 UTC from IEEE Xplore. Restrictions apply.

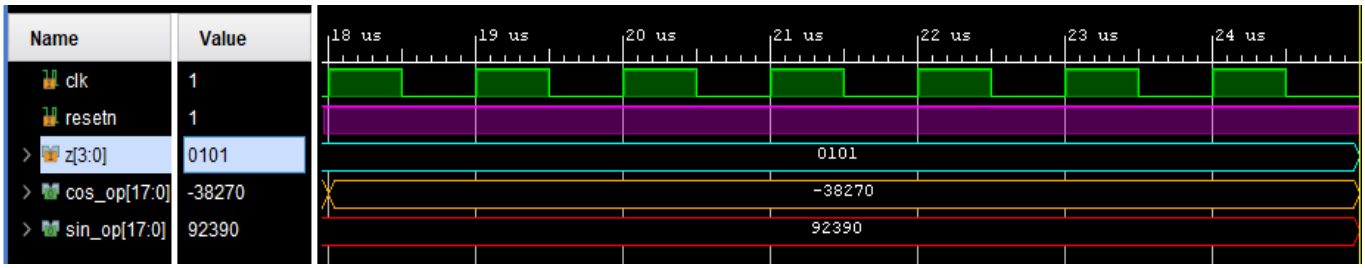

Fig. 4 - Simulation result for input z=0101

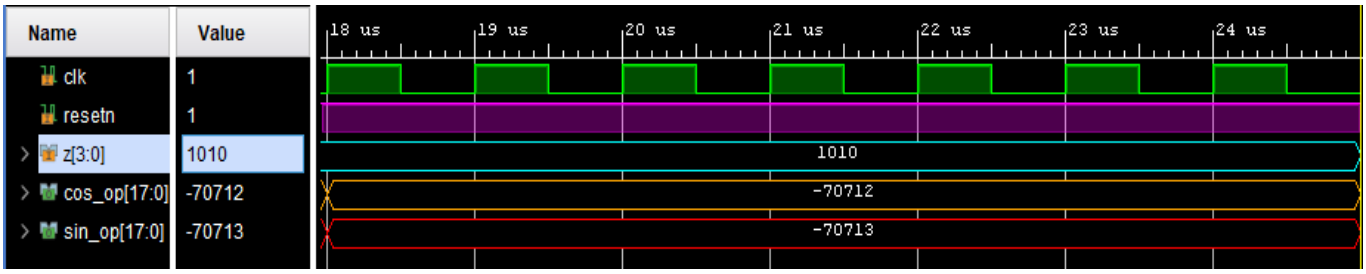

Fig. 5 - Simulation result for input z=1010

IV. Conclusion

The CORDIC architecture is successfully coded using VHDL. Parallel CORDIC architecture is used for implementation on FPGA. This architecture uses more hardware and power consumption compared to iterative CORDIC but gives time advantage so it is used in high-speed applications. The angle coverage by CORDIC algorithm is [0° - 90°], and cannot cover [91° - 360°], which limits the calculation range of the algorithm. The angles which lie in second, third, fourth quadrant can be converted to first quadrant by flipping the angles. Then using the iterative CORDIC operations to evaluate the sin, cos magnitude values. Further with the use of 2's compliment the perfect sign is provided along with the magnitude value in accordance with the respective quadrants. This design produces high throughput and less latency for continuous bits of input also it is found that CORDIC algorithm is the efficient method and is better in terms of power consumption and area. The worst-case error of sin, cos values obtained from above implementation is 2.32×10^{-5} units. This architecture can be utilized as digital sine and cosine value generator in various digital signal processing systems, robotics and graphics apart from general scientific computations.

References

[1] X. Hu, R. G. Harber and S. C. Bass, "Expanding the range of convergence of the CORDIC algorithm," in IEEE Transactions on Computers, vol. 40, no. 1, pp. 13-21, Jan. 1991, doi: 10.1109/12.67316.

[2] J.E. Volder, "The CORDIC Trigonometric Computing Technique," in IRE Transactions on Electronic Computers, vol. EC-8, no. 3, pp. 330-334, Sept. 1959, doi: 10.1109/TEC.1959.5222693

[3] B. Kir, M. A. Altuncu and Ş. Sahin, "FPGA based implementation of CORDIC using different number format," 2013 The International Conference on Technological 0 Electronics and Computer Engineering (TAEECE), Konya, Turkey, 2013, pp. 444-448, doi: 10.1109/TAEECE.2013.6557315.

[4] Ramesh Bhakthavatchalu, M. S. Sinith, Parvathi Nair and K. Jismi, "A comparison of pipelined parallel and iterative CORDIC design on FPGA," 2010 5th International Conference on Industrial and Information Systems, Mangalore, India, 2010, pp. 239-243, doi: 10.1109/ICIINFS.2010.5578702.

[5] Sahoo and M. Panigrahy, "Hardware Implementation of CORDIC Algorithm," 2018 International Conference on Applied Electromagnetics, Signal Processing and Communication (AESPC), Bhubaneswar, India, 2018, pp. 1-4, doi:10.1109/AESPC44649.2018.9033343.

[6] Steer and Penstone, "Digital Hardware for Sine-Cosine Function," in IEEE Transactions on Computers, vol. C-26, no. 12, pp. 1283-1286, Dec. 1977, doi: 10.1109/TC.1977.1674791.

[7] X. Wang, "Design and Implementation of CORDIC Algorithm Based on FPGA," 2018 International Conference on Robots & Intelligent System (ICRIS), Changsha, China, 2018, pp. 70-71, doi: 10.1109/ICRIS.2018.00026.

[8] G. Amruta, P. Yogita, P. Puja and P. V. S. Shastry, "Low latency and high accuracy archtectures of cordic algorithm for cosine calculation on FPGA," 2008 15th IEEE International Conference on Electronics, Circuits and Systems, Saint Julian's, Malta, 2008, pp. 478-481, doi: 10.1109/ICECS.2008.4674894.

[9] M. M. Anas, R. S. Padiyar and A. S. Boban, "Implementation of cordic algorithm and design of high speed cordic algorithm," 2017 International Conference on Energy, Communication, Data Analytics and Soft Computing (ICECDS), Chennai, India, 2017, pp. 1278-1281, doi: 10.1109/ICECDS.2017.8389648.

[10] A. Arockia Bazil Raj, FPGA-Based Embedded System Developer's Guide. CRC Press, 2018.

[11] M. Chinnathambi, N. Bharanidharan and S. Rajaram, "FPGA implementation of fast and area efficient CORDIC algorithm," 2014 International Conference on Communication and Network Technologies, Sivakasi, India, 2014, pp. 228-232, doi: 10.1109/CNT.2014.7062760

[12] P. A. Kumar, "FPGA Implementation of the Trigonometric Functions Using the CORDIC Algorithm," 2019 5th International Conference on Advanced Computing & Communication Systems (ICACCS), 2019, pp. 894-900, doi: 10.1109/ICACCS.2019.8728315.

[13] Arockia Bazil Raj, A, et al. 2020, 'Extraction of Doppler Signature of micro-to-macro rotations/motions using CW Radar assisted measurement system', IET- Science, Measurement & Technology, Mar. 2020.

Authorized licensed use limited to: ULAKBIM UASL - CUKUROVA UNIVERSITESI. Downloaded on November 06,2022 at 11:32:03 UTC from IEEE Xplore. Restrictions apply.

[14] Arockia Bazil Raj, A, 2016, 'Mono-pulse tracking system for active free space optical communication', Optik– International Journal for Light and Electron Optics, vol. 127, issue. 19, pp. 7752-7761.

[15] Arockia Bazil Raj, et al. 2016, 'Performance Analysis of Free Space Optical Communication in Open-Atmospheric Turbulence Conditions with Beam Wandering Compensation Control', IET Communications, vol.10, iss.9, pp.1096-1103.

[16] Arockia Bazil Raj, et al. 2015, 'Design of Cognitive Decision-Making Controller for Autonomous Online Adaptive Beam Steering in Free Space Optical Communication System', Wireless Personal Communications. 84, Issue. 1, pp.765-799.

[17] Arockia Bazil Raj, et al. 2014, 'Intensity Feedback based Beam Wandering Mitigation in Free Space Optical Communication using Neural Control Technique', EURASIP Journal on Wireless Communications and Networking, 160, pp.1-18.

[18] AA Bazil Raj, et al. 2014 'A Direct and Neural Controller Performance Study with Beam Wandering Mitigation Control in Free Space Optical Link', Optical Memory and Neural Networks (Information Optics), Vol. 23, Iss.3, pp.111-129.

[19] Arockia Bazil Raj, et al. 2014, 'Mitigation of Beam Fluctuation due to Atmospheric Turbulence and Prediction of Control Quality using Intelligent Decision-Making Tools', Applied optics, vol. 53, no. 17, pp. 37962-3806.

[20] Gaurav Sharma, et al. 2020, "Effects of Antenna Radiation Pattern on Airborne SAR Imaging with Sufficient Cyclic Prefix-OFDM", IEEE Inter., Conf. Information and Communication Technology 2020, pp.1-6

[21] Gaurav Sharma, et al. 2020, "Spotlight SAR Imaging with Sufficient Cyclic Prefix-OFDM Waveform", IEEE Inter., Conf., Smart Electronics and Communication-2020, pp.1-6

[22] Maheeja Maddegalla, et al. 2020, "Beam Steering and Control Algorithm for 5-18GHz Transmit/Receive Module Based Active Planar Array", IEEE Inter., Conf.,Systems, Computation, Automation and Networking (ICSCAN)", pp.1-6.

[23] Neha Singh, et al. 2020, "Estimation of Heart Rate and Respiratory Rate using Imaging Photoplethysmography Technique", IEEE Inter., Conf.,Systems, Computation, Automation and Networking (ICSCAN)", pp.1-6

[24] Sampurna De, et al. 2020, "Angle Estimation using Modified Monopulse Ratio Algorithm and S-curve in Adaptive Subarray Level ", IEEE Inter., Conf., "Systems Inventive Research in Computing Applications (ICIRCA 2020)", pp.1-7.

[25] Mary Latha C, et al. 2020, "Design and Implementation of A Secure Physical Unclonable Function In FPGA", IEEE Inter., Conf., "Systems Inventive Research in Computing Applications (ICIRCA 2020)", pp.1-7.

[26] Deepshikha, et al. 2020, "Signal Processing for Digital Beamforming on Transmit in MIMO Radar", IEEE Inter., Conf., "Systems Inventive Research in Computing Applications (ICIRCA 2020)", pp.1-7.

[27] Urvasi Singh, et al. 2020, "A Comparison Study of Multiple Radar Waveform Design Techniques", Customised floating-point algorithm for the ranging systems", IEEE Inter., Conf., "Systems Inventive Research in Computing Applications (ICIRCA 2020)", pp.1-7.

[28] Rohit Kumar. et al, 2020,"Customised floating point algorithm for the ranging systems", IEEE Inter., Conf., "Systems, computation, automation and networking (ICSCAN)", pp. 1-7.

[29] Mayur M Gunjal. Et al, 2020,"Improved direction of arrival estimation using modified MUSIC algorithm", IEEE Inter., Conf., "Communication and Electronics Systems (ICCES)", pp. 1-6.

[30] Joydeep Mazumder, et al. 2020, "Detection and classification of UAV using propeller Doppler profiles for counter UAV systems", IEEE Inter., Conf., "Communication and Electronics Systems (ICCES)", pp. 1-6.

[31] Harish C Kumawat, et al. 2020, "Approaching/Receding Target Detection using CW Radar ", IEEE Inter., Conf., "Communication and Electronics Systems (ICCES)", pp. 1-6.

[32] Sayanti Pal, et al. 2020,"Performance Study of Different Robotic Manipulator Systems Designed for Space Debris Management", IEEE Inter., Conf., "Communication and Electronics Systems (ICCES)", pp. 1-6.

[33] Anju P, et al. 2020,"Pulse Doppler processing: A novel digital technique", IEEE Inter., Conf., "Intelligent computing and control systems (ICICCS)", pp. 1-6.

[34] Harish C Kumawat, et al. 2019,"Data acquisition and signal processing system for CW Radar", IEEE Inter., Conf., "Computer, Communication, Control and Automation", pp. 1-4.

[35] Suchismita Batabyal, et al. 2019, "Design of Ring Oscillator Based PUF with Enhanced Challenge Response pair and Improved Reliability", IEEE Inter., Conf., 'Recent Trends on Electronics, Information, Communication and Technology(RTEICT)' pp.1-5

[36] Lakshmi Prasad, et al. 2019, "Design of 2D-WH/TS OCDMA PON ONU Receiver with FLC Technique", IEEE Inter., Conf., 'Recent Trends on Electronics, Information, Communication and Technology(RTEICT)' pp. 56-61

[37] Ravi Vaishnavi, et al. 2019, "Implementation of Algorithm for Point Target Detection and Tracking in Infrared Image Sequence", IEEE Inter., Conf., 'Recent Trends on Electronics, Information, Communication and Technology(RTEICT)', pp. 1-5.

[38] Arockia Bazil Raj, A et al, 2018, 'Multi-Bit Digital Receiver Design for Radar Signature Estimation', IEEE Int., Conf., 'Recent Trends in Electronics, Communication and Information Technology 2018', pp. 1-6.

[39] M Upadhyay, et al. "Intelligent System for Real time detection and classification of Aerial Targets using CNN", IEEE Inter., Conf., "Intelligent computing and control system", pp. 1-6, 2021

[40] M Upadhyay, et al. "Intelligent System for Real time detection and classification of Aerial Targets using CNN", IEEE Inter., Conf., "Intelligent computing and control system", pp. 1-6, 2021

[41] AS Akella, et al. "DCNN Based Activity Classification of Ornithopter using Radar micro-Doppler Images", IEEE Inter., Conf., "5th International Conference on Intelligent computing and control systems", pp.1-5, 2021

[42] Darusalam, Ucuk, et al. "Performance of Free-space Optical Communication Systems using Optical Amplifiers under Amplify-forward and Amplify-received Configurations." Makara Journal of Technology 24.3 (2020): 117-124.

Authorized licensed use limited to: ULAKBIM UASL - CUKUROVA UNIVERSITESI. Downloaded on November 06,2022 at 11:32:03 UTC from IEEE Xplore. Restrictions apply.