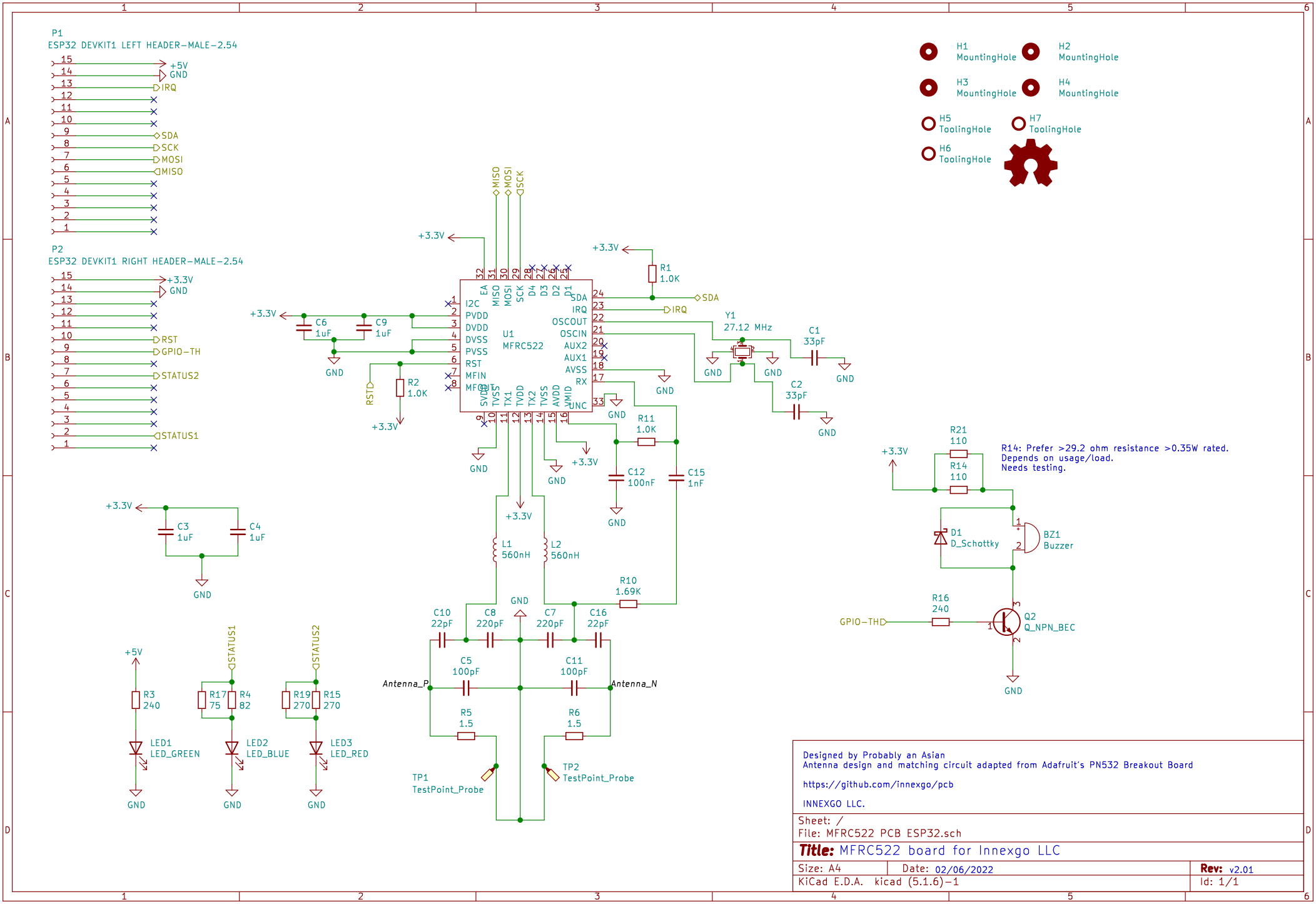
P1
ESP32 DEVKIT1 LEFT HEADER-MALE-2.54
+5V
GND
IRQ
SDA
SCK
MOSI
MISO
P2
ESP32 DEVKIT1 RIGHT HEADER-MALE-2.54
+3.3V
GND
RST
GPIO-TH
STATUS2
STATUS1
H1 MountingHole
H2 MountingHole
H3 MountingHole
H4 MountingHole
H5 ToolingHole
H7 ToolingHole
H6 ToolingHole
U1
MFRC522
I2C
PVDD
DVDD
DVSS
PVSS
RST
MFIN
MFOUT
SVDD
TVSS
TX1
TVDD
TX2
TVSS
AVDD
VMID
UNC
EA
MISO
MOSI
SCK
D4
D3
D2
D1
SDA
IRQ
OSCOUT
OSCIN
AUX2
AUX1
AVSS
RX
C6 1uF
C9 1uF
R2 1.0K
RSTD
R1 1.0K
Y1 27.12 MHz
C1 33pF
C2 33pF
R11 1.0K
C12 100nF
C15 1nF
C3 1uF
C4 1uF
L1 560nH
L2 560nH
R10 1.69K
C10 22pF
C8 220pF
C7 220pF
C16 22pF
C5 100pF
C11 100pF
Antenna_P
Antenna_N
R5 1.5
R6 1.5
TP1 TestPoint_Probe
TP2 TestPoint_Probe
R3 240
LED1 LED_GREEN
R17 75
R4 82
LED2 LED_BLUE
R19 270
R15 270
LED3 LED_RED
R21 110
R14 110
R14: Prefer >29.2 ohm resistance >0.35W rated.
Depends on usage/load.
Needs testing.
D1 D_Schottky
BZ1 Buzzer
R16 240
Q2 Q_NPN_BEC
Designed by Probably an Asian
Antenna design and matching circuit adapted from Adafruit's PN532 Breakout Board
https://github.com/innexgo/pcb
INNEXGO LLC.
Sheet: /
File: MFRC522 PCB ESP32.sch
Title: MFRC522 board for Innexgo LLC
Size: A4
Date: 02/06/2022
Rev: v2.01
KiCad E.D.A. kicad (5.1.6)-1
Id: 1/1