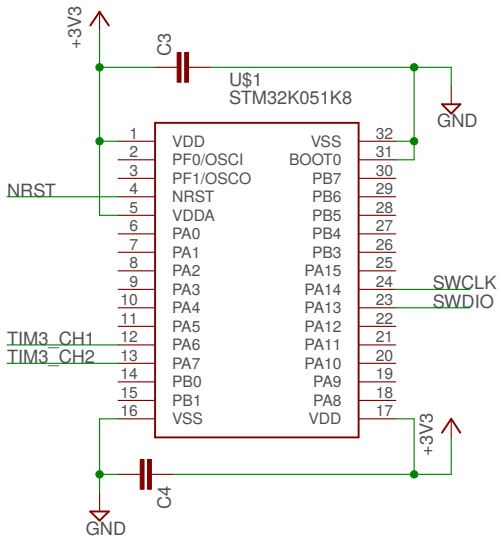

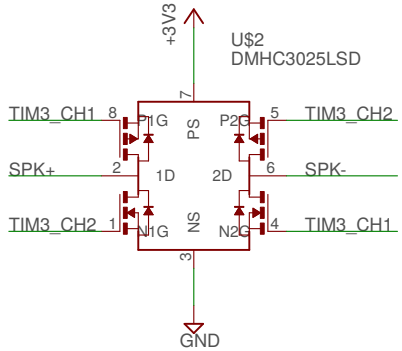

TITLE: pwm_audio	
Document Number:	REV:
Date: 2016-11-05 11:31 PM	Sheet: 1/1