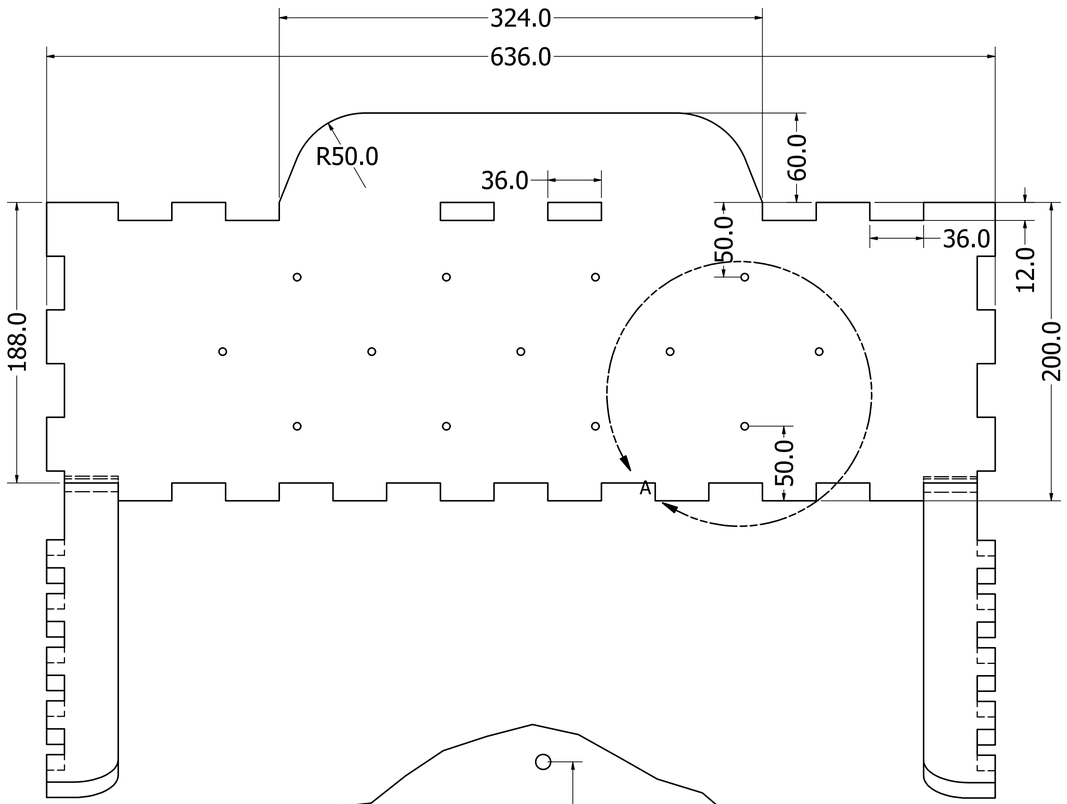

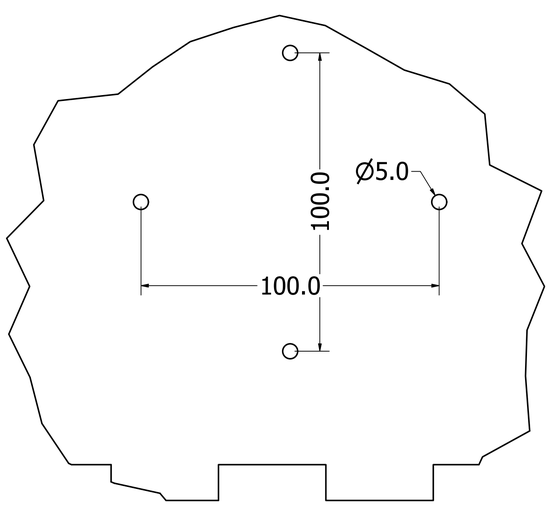

DETAIL A
SCALE 1 : 1

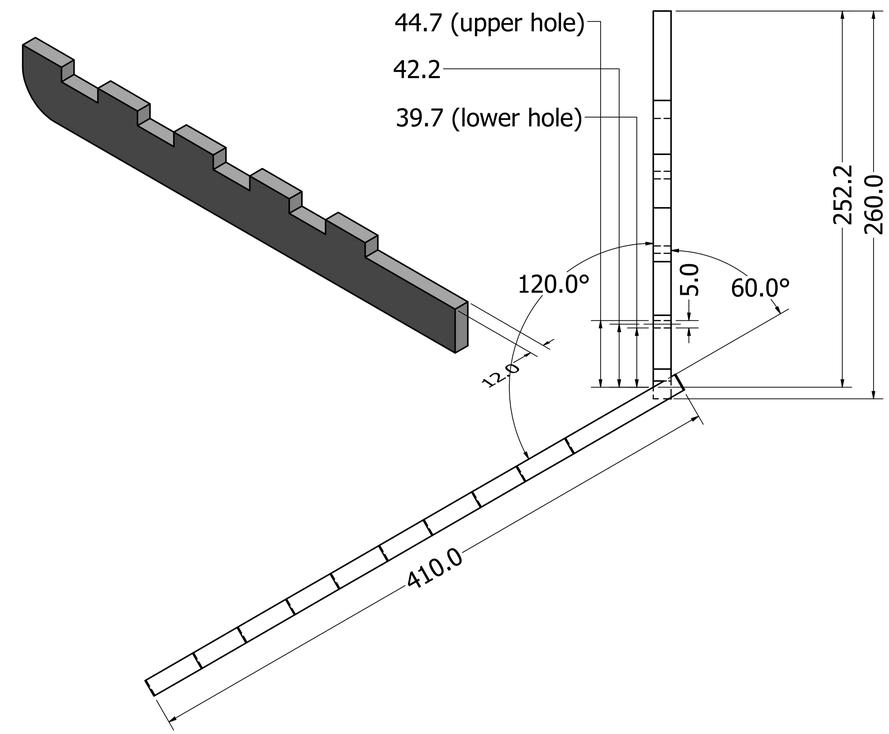

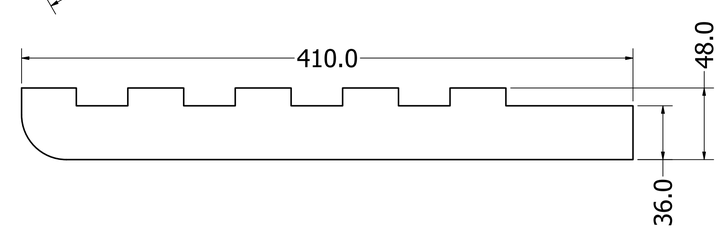

DRAWN Erwin	2/08/2019	
CHECKED		TITLE
QA		Mounting points
MFG		
APPROVED		SIZE D / DWG NO mounting_points / REV
		SCALE 1 / 2 / SHEET 1 OF 1