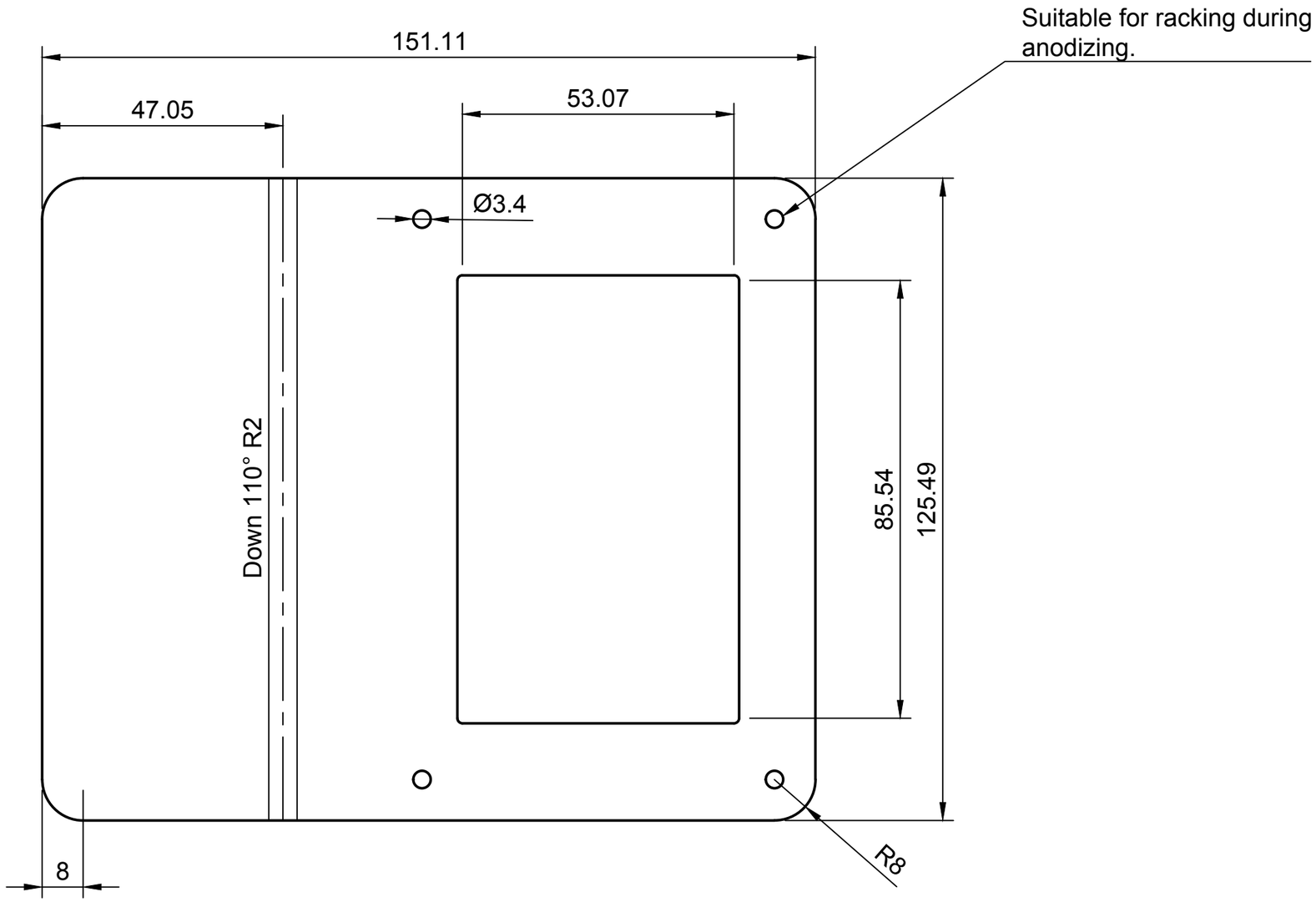

Dept.	Technical reference	Created by	Approved by
		Jason Morley 07/10/2023	
		Document type	Document status
		Title StatusPanel 2a	DWG No.
			Rev. / Date of issue / Sheet 1/1