University Rover Challenge Preliminary Design Report 2024-2025

Lehigh University Space Initiative (LUSI)
Lehigh University, Bethlehem, PA, USA

Michael Baron (mabg26@lehigh.edu)
Hannah Peik (hap226@lehigh.edu)

1. Team Structure

The Lehigh University Space Initiative rover team has a roster of 28 active members, one academic advisor, and 7 executive board members. We divided our members into five sub-teams each with a team lead: DCS (Drive, Chassis & Suspension), Software, Science, Electrical, and Robotic Arm. Each of these sub-teams are specialized in building our rover's capability for competing in specific missions and have a designated upperclassmen lead. The breakdown of active members in each sub-team is as follows: Software (3), Science (6), Robotic Arm (5), Electro-Comms (6), DCS (7) Business (1). The team meets twice a week, once for design/manufacturing sessions and another for training and additional work.

2. Team Resources

LUSI has many sources of funding and facilities which have been utilized in order to design and build our rover. Securing funding has been a large focus point of our efforts. Our main source of funding has been our school's engineering department, who up to this point have given us an additional $15000 this year to complete our project. In addition, we have also run a crowdfunding campaign that raised $2000 and have utilized the $2000 Protocase sponsorship. All of the aforementioned funds we have planned to devote towards our Rover. Our budget has been managed through our Jira, an Atlassian product. This tool allows us to submit parts to be ordered as tickets that can then be checked off once purchased, and the costs are totalled together to keep track of expenses. In order to design our rover we have used Lehigh's CAD Lab as well as their cloud storage service. For manufacturing, we use on-campus resources in Wilbur Powerhouse. The space is equipped with a waterjet, laser cutter, CNC Mills, and 3D printers which allow us to fabricate our own parts. We have been allotted a designated space within Wilbur Powerhouse for our club to operate and store supplies. The science sub-team has a lab space where they use to carry out biological and chemical experiments. In order to test our rover's critical mission systems we will use Lehigh's Goodman Campus, a facility with large open spaces.

3. Project Management Plan

To begin our development cycle, new members split into our five subteams. These teams are in charge of developing their subsystem through design, manufacturing, systems integration, and testing phases. The focus of this year's design phase was improving upon previous iterations and completely redesigning the arm. Additionally, we've shifted our project management strategy to focus more on recruitment, member orientation, skill training, team organization, and team accountability.

4. Preliminary Technical Designs

4.1 Drive, Chassis, & Suspension:

The drive, chassis, and suspension (DCS) subteam has updated our previous design and has nearly completed manufacturing and testing. The new chassis utilizes a modular setup in which any given module (robotic arm, science, autonomous) can connect to the main chassis body, which holds the core electronics. The suspension system is a rocker-bogie system with aluminum tubes and PETG pivot joints. The main axles are steel and are mounted in a 3d-printed and aluminum housing. The suspension system is stabilized by an aluminum differential bar connected by rod end bearings. The wheels currently consist of aluminum cylinders supported with an aluminum spoke design. Currently, different tread patterns and materials are being tested, but we plan to utilize a 3d printed PLA or TPU design to wrap around the aluminum base of the wheel. 12:1 DC REV Robotics NEO brushless motors are used to

spin the wheels and drive the rover.

4.2 Science:

The science module (SciMod) will perform the in-situ analysis of soil samples for the biomarker catalase. First, samples are collected by the drill assembly (consisting of an auger driven by a DC motor) in a soil collection chamber. A soil bridge and servo motor mechanism controls the depth of soil entering the collection chamber. Hydrogen Peroxide is pumped into the collection chamber. The mixture is then pumped to the mixing chamber. Once mixed, Cobalt Bicarbonate is added, reacting with any remaining Hydrogen Peroxide to create Carbonato-Cobaltate (III). A spectrophotometer (calibrated against a control sample) will then determine the amount of Carbonato-Cobaltate (III), with that data being correlated to the concentration of catalase using lab-developed calibration curves. The final results will be automatically formatted and sent back to the base station for the judge presentation. Finally, stratigraphic sites will be documented via the rover's cameras with the images being cross-referenced with a custom stratigraphy database for analysis.

4.3 Software:

To autonomously drive the rover, we plan to incorporate a camera and interpret the environment internally using OpenCV. This system is currently under development. For robotic arm control, we will use the Moveit package in ROS. Future work includes managing the robotic arm, science module, and remote-controlled movement, which will each incorporate a basic I/O subsystem to interact with each actuator. Remote-controlled communication uses a radio with an antenna. Accompanying this communication is our control station, a user-friendly interface that is already in place to manage the whole system. Our software can already interpret these radio signals and carry out the respective commands for manual driving.

4.4 Electrical:

The main power supply is a 12V, 100Ah LFP battery. A power distribution board is wired from the supply to distribute 12V throughout the chassis and provide overcurrent protection. A Jetson Orin Nano and a Raspberry Pi are coupled to communicate between different modules and control movement. A 19V step-up and 5V regulator are used to power the Jetson and Pi respectively. Power consumption data is processed through the Jetson to notify operators of the battery life and provide troubleshooting data. To accommodate the new modular design, we have developed a plan to connect each module by simply using a connector for power and a connector for data.

4.5 Communications:

A Ubiquiti omni-directional antenna paired with a 120-degree view high-gain antenna will be used for long range wireless communication with the rover. Four video streams along with all necessary sensor data and control data will be transmitted on the 2.4GHz band using the UDP transport layer protocol. The data received at the ground station will be displayed in an interactive GUI. For wired communication between rover components, a variety of solutions are used. An ethernet connection will enable a UDP session between the main rover computer (Jetson Orin Nano) and the secondary computer (Raspberry Pi 4B). The Raspberry Pi will be responsible for motor control and acquiring sensor data which will be transmitted to the Jetson for transmission back to the ground station and vice versa.

4.6 Robotic Arm:

Our rover features a 7-axis robotic arm mounted on a detachable front module of the chassis, which houses the base gearbox and all electronics for the arm. Each joint is powered by DC brushless motors from Rev Robotics. The base, shoulder, and elbow joints use V1.1 motors paired with 125:1 gearing, while the wrist operates with three Neo 550 motors geared at 64:1. The arm's structure is reinforced with 0.5-meter, 1.5-inch diameter carbon fiber tubes connecting the joints. At the end of the arm, the end effector is equipped with two PETG 3D-printed gears driven by a 64:1 Neo 550 motor, allowing smooth operation for grasping objects of various sizes. TPU 3D-printed pads on the grippers enhance

friction, enabling secure handling of different objects without slippage.

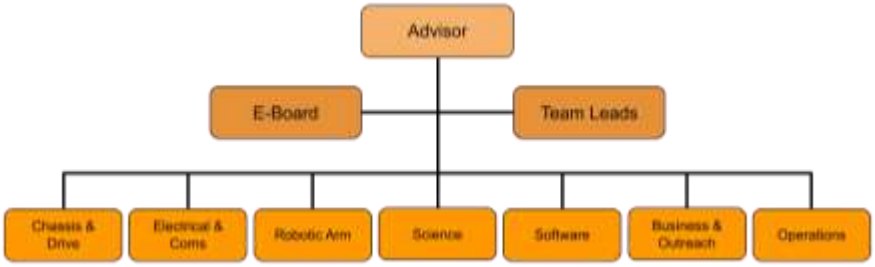

Fig 1.1: Team Structure

Funding Sources	**Amount (USD)**	**Expenses**	**Amount (USD)**
LU Engineering Dept	$15,000	Chassis/Drive	$8,500
Protocase	$2,000	Robotic Arm	$3,700
Crowdfunding	$2,000	Science	$1,200
		Software	$550
		Electrical/Communications	$2,700
Total amount raised	$19,000	Miscellaneous	$2,700
Total amount left to be raised	$350	Total cost of development	$19,350

Fig 2.1: Budget & Expenses

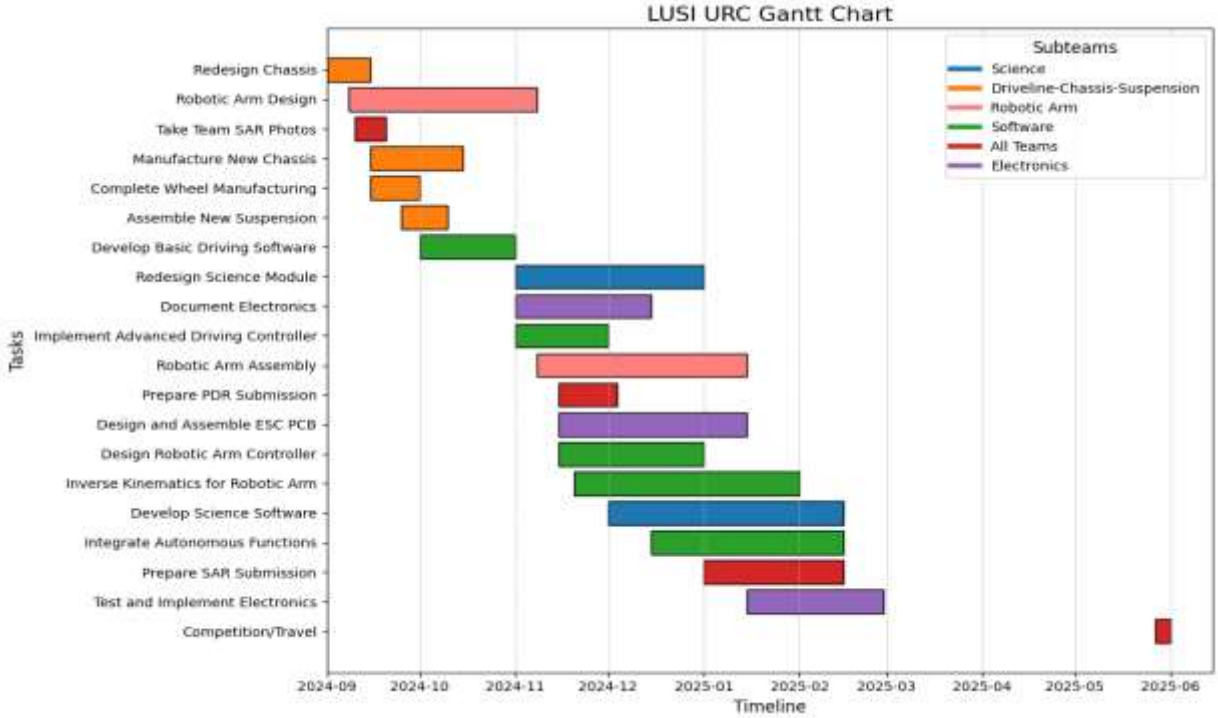

Fig 3.1: URC Gantt Chart

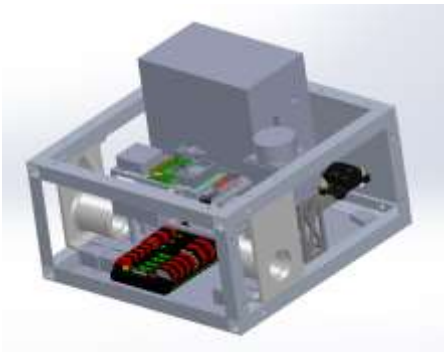

Fig 4.1.1 Chassis

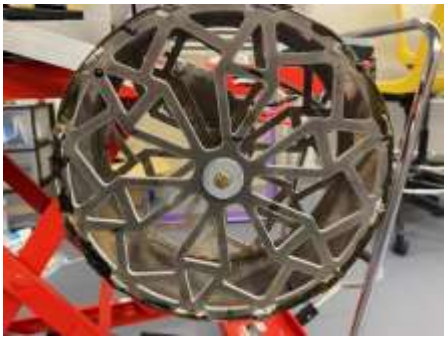

Fig 4.1.2 Prototype Wheel Assembly

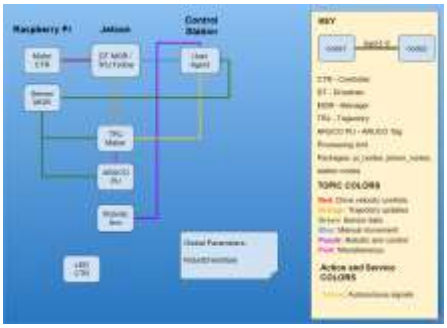

Fig 4.2 SciMod Drill

Fig 4.3 Software Schematics

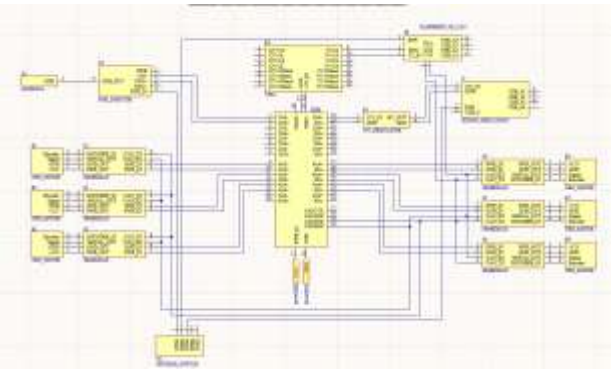

Fig 4.4 Electrical Schematic

Fig 4.6 Robotic Arm Assembly