University Rover Challenge Preliminary Design Report 2025-2026

Lehigh University Space Initiative (LUSI)
Lehigh University, Bethlehem, PA, USA

Hannah Peik (hap226@lehigh.edu)
Ethan Maher (ehm227@lehigh.edu)

1. Team Structure

The Lehigh University Space Initiative rover team has 35 active members, one academic advisor, and 7 executive board members. We divide members into five sub-teams, each led by an upperclassman: DCS (Drive, Chassis & Suspension), Software, Science, Electrical, and Robotic Arm. Our active members span Computer Science (7), Mechanical/Electrical Engineering (20), Business (2), and Biology/Chemistry/Physics (6). Recruiting takes place during the first weeks of both semesters at Lehigh's club fair and engineering department events, followed by new member training with weekend sessions on CAD, 3D printing, circuit and PCB design, and software introductions. The team meets twice a week, with one session for design/manufacturing and another for training and additional work. This year's outreach plan includes attending the Lehigh Valley Space Fest and giving presentations to elementary school field trips visiting Lehigh, introducing STEM and aerospace concepts through age-appropriate activities such as glider building.

2. Team Resources

Our primary funding comes from Lehigh's engineering department, which contributed $10,000 this year. We also ran a 3-month crowdfunding campaign that raised $2,000 and used the $2,000 Protocase sponsorship. Our budget is managed through Jira, where parts are submitted as order tickets, checked off once purchased, and automatically totaled to track expenses. For rover design we use Lehigh's CAD Lab and cloud storage, and for manufacturing we rely on on-campus facilities in the Wilbur Powerhouse Makerspace, which provides a waterjet, laser cutter, CNC mills, and 3D printers. We have a designated workspace in Wilbur Powerhouse for operations and storage. The science team has uses an on-campus lab for biochemical testing. Rover driving, science operations, and autonomous navigation are tested at Lehigh's Goodman Campus, which offers large open areas and hills.

3. Project Management Plan

To begin our development cycle, new members join one of five subteams, each responsible for its subsystem through the full URC life cycle: design, manufacturing, systems assembly and integration, and testing. This year's design phase focuses on reducing rover weight, customizing electronics, and increasing maneuverability. We use Jira to track workflow, coordinate part orders, and manage to-dos, and our Gantt chart outlines subteam tasks and responsibilities across the development timeline. Knowledge is shared through rigorously maintained Confluence pages documenting design changes, broken and repaired parts, and research. Our systems engineering plan features regular cross-team integration reviews during leadership meetings and scheduled subsystem handoffs. Testing and evaluation will occur in the spring before SAR submission, including component-level tests during manufacturing, subsystem functional tests before integration, and full-system field tests covering science drilling and autonomous navigation.

4. Preliminary Technical Designs

4.1 Driveline, Chassis, & Suspension:

For this year's rover, we are shifting from a six-wheel skid steering design to a four-wheel configuration with steering units. This decision reduces total system weight, improves low-speed maneuverability, and eliminates the high power losses associated with skid steering. The design process included torque calculations and steering geometry analysis to confirm that the reduced wheel count does not compromise obstacle clearance or traction. 3D printing is now limited to low-stress geometries only, using aluminum for structural components, providing higher stiffness, better fatigue resistance, and much faster fabrication times. In the chassis, components are being reorganized for better serviceability and weight distribution. The layout places the heavier components like the battery in a central and lower

position to reduce the center of gravity, and weights are spread out for evenly distributed load. Our science and robotic arm chassis were reduced in size, further reducing weight and complexity.

4.2 Science:

The science module performs in-situ biochemical analysis of subsurface soil using two assays: the Biuret test for peptide bonds and the Benedict's test for reducing sugars. Site selection uses wide-angle and close-up images from the rover's cameras, which are compared to a custom stratigraphic database to identify high-potential locations. Soil is collected by an auger and directed into a dropper mechanism that remains open above 10 cm and closes once subsurface material is reached. A load-cell verifies sample mass, and a 7-in-1 soil probe measures nitrogen, phosphorus, potassium, pH, electrical conductivity, temperature, and moisture before testing. The sample is released into a sealed chamber with two cuvettes pre-filled with Biuret and Benedict's reagents. The chamber spins to mix the soil and then allows settling for clearer color changes. It then rotates each cuvette before a custom spectrometer, which records absorbance values. These are compared to blank calibration curves created in the lab to quantify each reaction, and the interpreted results are transmitted to the base station for judge presentation.

4.3 Software:

To autonomously drive the rover, we plan to incorporate a camera and LiDAR sensor and interpret the environment internally using OpenCV, and then to do pathplanning and navigation using the Nav2 stack in ROS2. This system is currently under development. For robotic arm control, we will use the MoveIt2 package in ROS2. Future work includes managing the robotic arm, science module, and remote-controlled movement, which will each incorporate a basic I/O subsystem to interact with each actuator. Remote-controlled communication uses a radio with an antenna. Accompanying this communication is our control station, a user-friendly interface that is already in place to manage the whole system. Future updates are planned to integrate autonomous navigation components into our user interface. Our software can already interpret these radio signals and carry out the respective commands for manual driving.

4.4 Electrical and Communications:

The rover's main power supply is a 12V, 100Ah LFP battery. A custom power distribution board routes 12V throughout the chassis and provides overcurrent protection, while a custom 5V step-down converter feeds multiple Raspberry Pis, an IMU, and a GPS module. A Jetson Orin Nano and a Raspberry Pi communicate to coordinate subsystem control and rover movement, with a 19V step-up converter powering the Jetson. Power consumption data is processed through the Jetson to report battery life and support troubleshooting. To support the new modular design, each module connects with one power and one data connector. A Ubiquiti omni-directional antenna paired with a 120° high-gain antenna enables long-range wireless communication. Four video streams, along with required sensor and control data, are transmitted on the 2.4 GHz band using UDP, and all received data is displayed at the ground station through an interactive GUI.

4.5 Robotic Arm:

This year's robotic arm consists of a linear actuator as the base, replacing last year's thin rotating platform to eliminate unwanted vibration. With the actuator carrying most of the load, the base motor can run with lower gearing while maintaining strength. The actuator is mounted on a compact 3.5″ × 8″ module to help cut overall rover weight while maintaining arm capabilities. All joints are driven by Rev Robotics brushless DC motors. The base, shoulder, and elbow use V1.1 motors with 125:1 gearing, while the wrist is powered by three Neo 550 motors at 64:1. The end effector has been simplified to 2-DoF, since the base actuator's translational motion provides the yaw rotation previously handled at the wrist. At the end of the arm, the end effector is equipped with two PETG 3D-printed gears, allowing smooth operation for grasping objects of various sizes. Although the overall design is similar to last year's, we are switching to a metal end effector for improved strength and support.

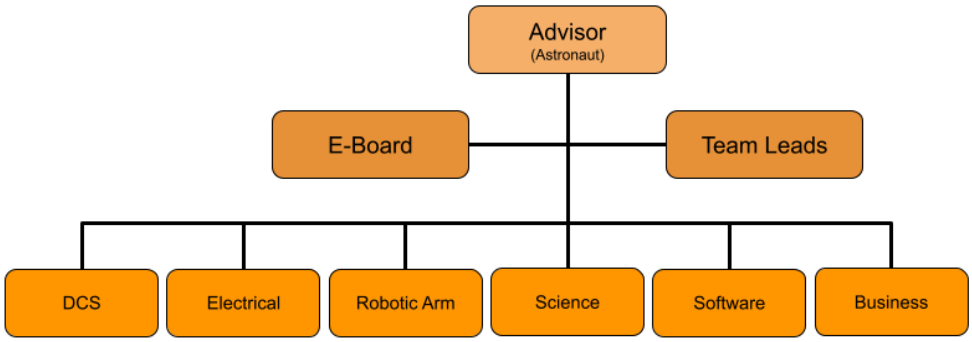

Fig 1.1: Team Structure

Lehigh University Space Initiative: URC PDR Budget	
Income	
Actual Income to Date	
Lehigh University Engineering Dept.:	$10,000.00
Crowdfunding:	$2,000.00
Protocase:	$2,000.00
Total Income Received to Date	**$14,000.00**
Anticipated Income	
Travel Funds Pledged by LU Engineering Dept. (contingent on getting into comp.):	$10,000.00
Total Additional Income Anticipated	
Travel Funds Pledged by LU Engineering Dept. (contingent on getting into comp.):	**$10,000.00**
Total Income	**$24,000.00**
Expenses	
Project Expenses Categories	
DCS	$2,740.00
Robotic Arm	$4,500.00
Electronics	$1,460.00
Software	$350.00
Science	$3,350.00
Food and Club Activities	$500.00
Competition Travel Expenses	$10,600.00
Total Expenses	**$23,500.00**
Forecase Funding Surplus (Deficit)	$500.00

Fig 2.1: Budget & Expenses

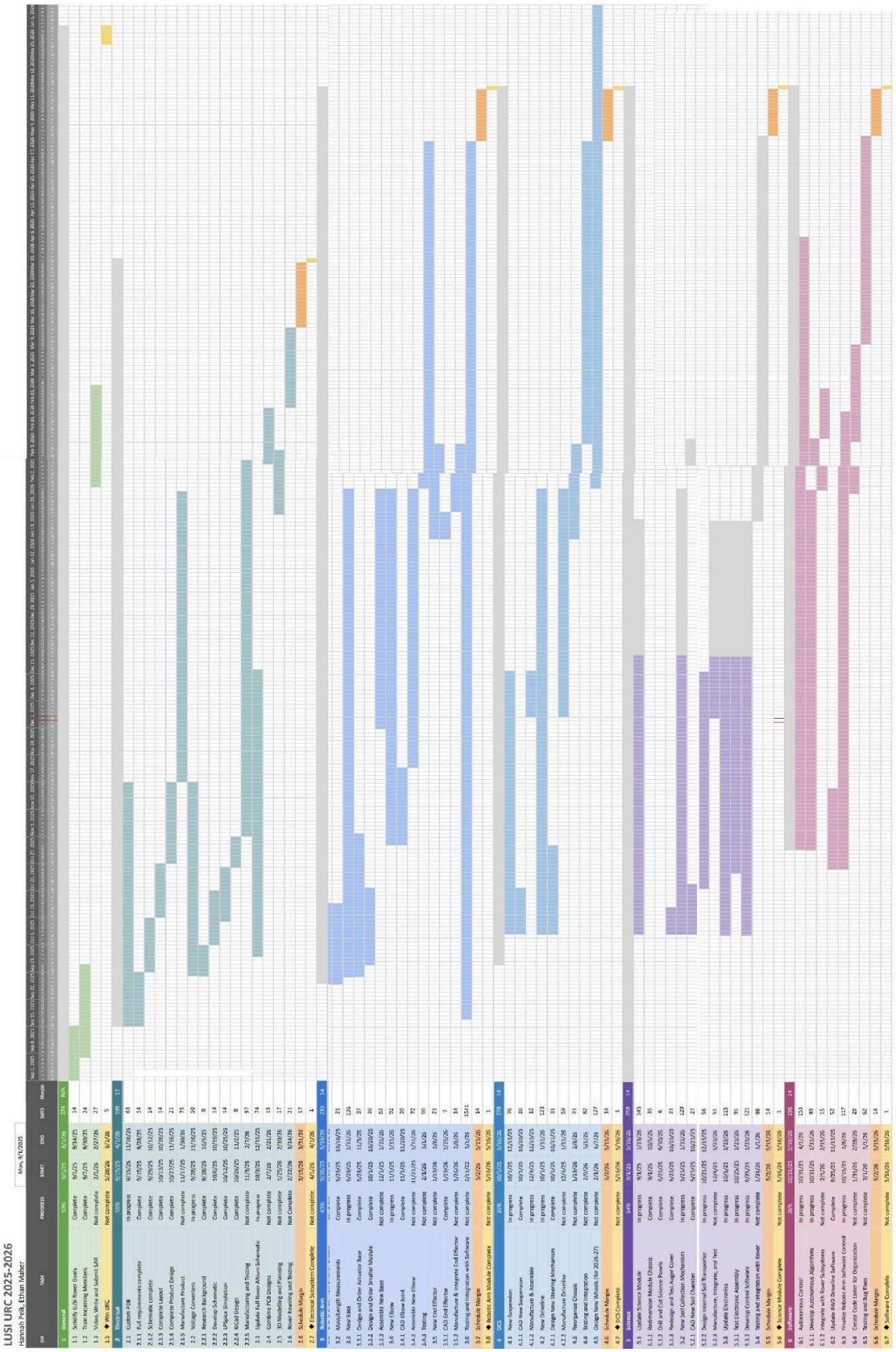

ID#	Task	PROGRESS	START	END	DAYS	Margin
3	General	50%	9/4/25	6/7/26	274	N/A
1.1	Solicitly LUSI Rover Goals	Complete	9/4/25	9/14/25	14	
1.2	Train Incoming Members	Complete	9/7/25	9/30/25	24	
1.3	Video, Write and Submit SAR	Not complete	2/1/26	2/27/26	27	
1.5	◆ Win URC	Not complete	5/28/26	6/1/26	5	
2	Robotic Arm	0%	9/15/25	11/21/25	67	17
2.1	Custom FSR	In progress	9/15/25	11/21/25	67	
2.1.1	Full measurements complete	Complete	9/15/25	9/28/25	14	
2.1.2	Sub measurements complete	Complete	9/29/25	10/12/25	14	
2.1.3	Complete Layout	Complete	10/13/25	10/26/25	14	
2.1.4	Complete Product Design	Complete	10/27/25	11/16/25	21	
2.1.5	Manufacture Product	Not complete	11/17/25	12/6/26	75	
2.2	Voltage Converters	In progress	9/28/25	11/16/25	50	
2.2.1	Research Background	Complete	9/28/25	10/5/25	8	
2.2.2	Develop Schematic	Complete	10/6/25	10/19/25	14	
2.2.3	LTSpice Simulation	Complete	10/12/25	10/25/25	14	
2.2.4	KiCad Design	Complete	10/26/25	11/2/25	8	
2.2.5	Manufacturing and Testing	Not complete	11/3/25	2/7/26	97	
2.3	Update Full Rover Altium Schematic	In progress	10/3/25	12/15/25	74	
2.4	Combine PCB Designs	Not complete	2/7/26	2/21/26	15	
2.5	3D Modelling and Planning	Not complete	1/25/26	2/10/26	17	
2.6	Rover Rewiring and Testing	Not Complete	2/22/26	3/14/26	21	
2.6	Schedule Margin		3/15/26	3/31/26	17	
2.7	◆ Electrical Subsystem Complete	Not complete	4/1/26	4/1/26	1	
3	Robotic Arm	0%	9/29/25	5/15/26	233	14
3.2	Manufacturing Measurements	Complete	9/29/25	10/16/25	21	
3.3	New Base	In progress	9/29/25	2/12/26	126	
3.3.1	Design and Order Actuator Base	Complete	9/29/25	11/3/25	37	
3.3.2	Design and Order Smaller Module	Complete	10/4/25	10/20/25	20	
3.3.3	Assemble New Base	Not complete	12/3/25	2/12/26	62	
3.4	New Elbow	In progress	11/7/25	1/31/26	52	
3.4.1	CAD Elbow Joint	Complete	11/7/25	11/20/25	20	
3.4.2	Assemble New Elbow	Not complete	11/21/25	1/31/26	72	
3.4.3	Testing	Not complete	2/1/26	3/4/26	90	
3.5	New End Effector	Not complete	1/13/26	2/6/26	21	
3.5.1	CAD End Effector	Complete	1/13/26	1/25/26	7	
3.5.2	Manufacture & Integrate End Effector	Not complete	1/26/26	2/6/26	11	
3.6	Testing and Integration with Software	Not complete	2/11/22	3/4/26	1541	
3.7	Schedule Margin		3/5/26	3/18/26	14	
3.8	◆ Robotic Arm Module Complete	Not complete	3/19/26	5/15/26	1	
4	DCS	0%	10/1/25	5/15/26	228	14
4.1	New Suspension	In progress	10/1/25	12/15/25	76	
4.1.1	CAD New Suspension	Complete	10/1/25	10/10/25	20	
4.1.2	Manufacture & Assemble	In progress	12/4/25	12/15/25	12	
4.2	New Drivetrain	In progress	10/1/25	1/31/26	123	
4.2.1	Design New Steering Mechanism	Complete	10/1/25	10/11/25	31	
4.2.2	Manufacture Drivetrain	Not complete	12/4/25	1/31/26	59	
4.3	Reorganize Chassis	Not complete	1/13/26	2/6/26	21	
4.4	Testing and Integration	Not complete	2/9/26	3/1/26	82	
4.5	Design New Wheels (for 2026-27)	Not complete	2/13/26	6/7/26	127	
4.6	Schedule Margin		5/2/26	5/15/26	14	
4.7	◆ DCS Complete	Not complete	5/15/26	5/15/26	1	
5	Science	54%	9/12/20	5/19/26	258	14
5.3	Update Science Module	In progress	9/4/25	1/23/26	145	
5.1.1	Redimension Module Chassis	Complete	9/4/25	10/5/25	35	
5.1.2	Drill and Cut Science Panels	Complete	9/25/25	9/30/25	6	
5.1.3	Redesign and Test Auger Cover	Complete	9/25/25	10/15/25	21	
5.2	New Soil Collection Mechanism	In progress	5/25/25	1/12/26	129	
5.2.1	CAD New Soil Chamber	Complete	5/25/25	10/17/25	27	
5.2.2	Design Internal Soil Transporter	In progress	10/21/25	12/15/25	56	
5.2.3	Manufacture, Integrate, and Test	Not complete	12/4/25	1/12/26	39	
5.3.1	Update Electronics Assembly	In progress	10/1/25	12/15/25	75	
5.3.1	Test Electronic Assembly	In progress	10/24/25	1/23/26	115	
5.3.2	Develop Control Software	In progress	9/25/25	12/12/26	91	
5.4	Testing and Integration with Rover	Not complete	1/23/26	5/1/26	121	
5.5	Schedule Margin		5/2/26	5/15/26	14	
5.6	◆ Science Module Complete	Not complete	5/16/26	5/16/26	1	
6	Software	26%	10/31/25	5/16/26	198	14
6.1	Autonomous Control	In progress	10/31/25	4/1/26	153	
6.1.1	Develop Autonomous Algorithms	In progress	10/31/25	12/12/26	93	
6.1.2	Integrate with Rover Subsystems	Not complete	2/1/26	2/15/26	15	
6.2	Update 4WD Driving Software	Complete	9/25/25	11/13/25	52	
6.3	Finalize Robotic Arm Software Control	In progress	10/15/25	2/8/26	117	
6.4	Create Code Linter for Organization	Not complete	1/31/26	2/28/26	29	
6.5	Testing and Bug Fixes	Not complete	3/1/26	5/1/26	62	
6.6	Schedule Margin		5/2/26	5/15/26	14	
6.7	◆ Software Complete	Not complete	5/16/26	5/16/26	1	

Fig 4.1: URC Gantt Chart

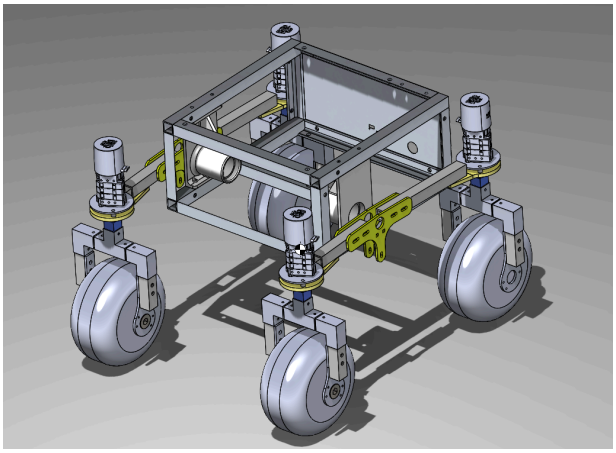

Fig 4.1 New Driveline & Suspension

Fig 4.5 Robotic Arm

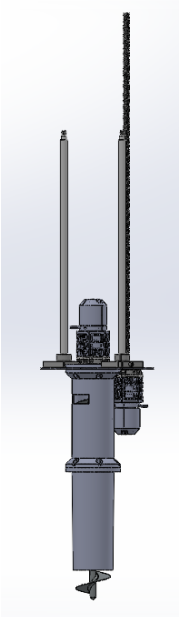

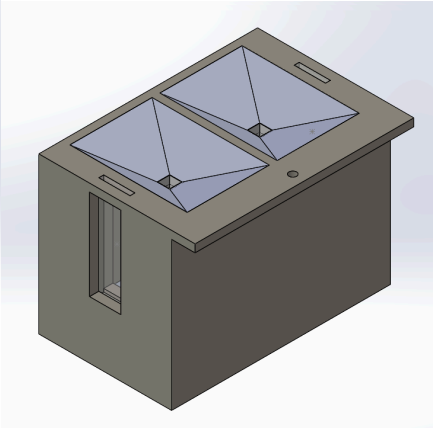

Fig 4.2 Science Drill & Testing Chamber

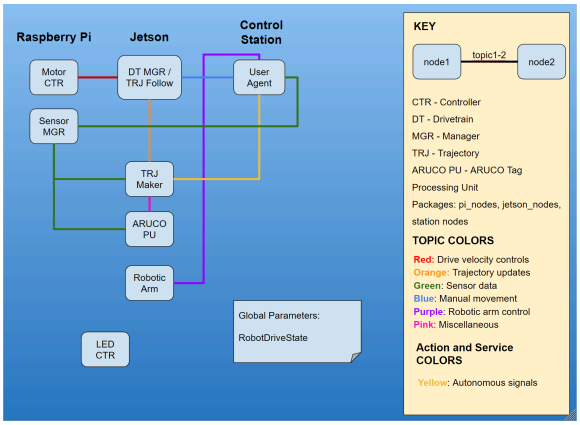

Fig 4.3 Software Schematics

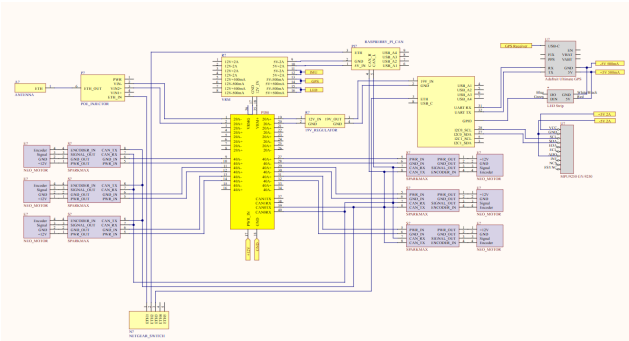

Fig 4.4.1 Electrical Schematic

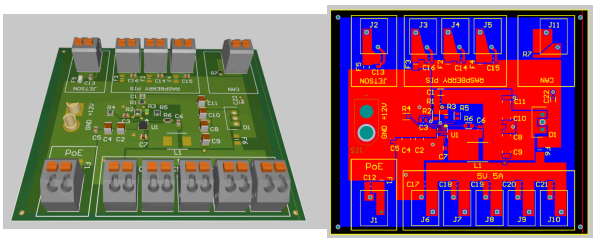

Fig 4.4.2 Custom 5V Step Down Converter