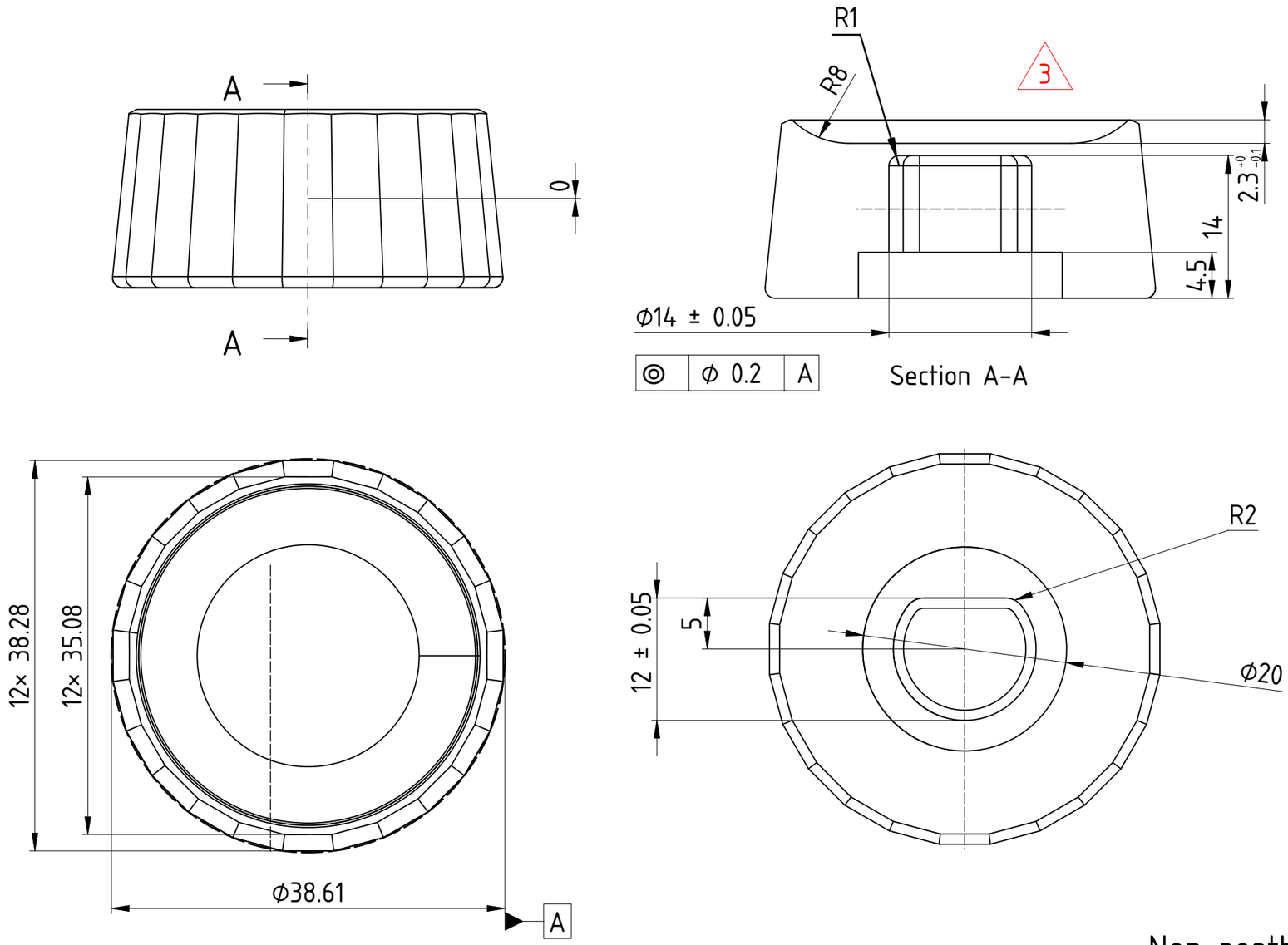


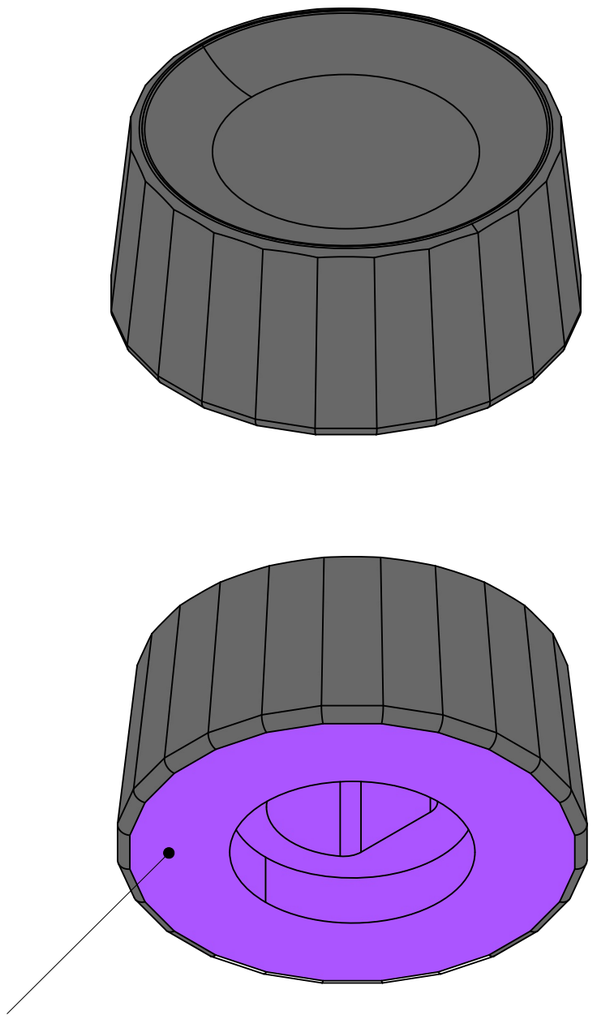

Non-aesthetical side (purple):

No burrs

| | | |
|---|---|---|
| STATUS APPROVED<br>DATE: 2024/08/27 | | KNOB-TEK2 |
| COMPANY Intech Studio Ltd. | | |
| REVISION 03 | | MATERIAL Aluminum 6061-T6 |
| SCALE 2:1 | TOLERANCES DIN 16742-TG5 | COLOR Sandblasted, black anodized (RAL code: 9004) |