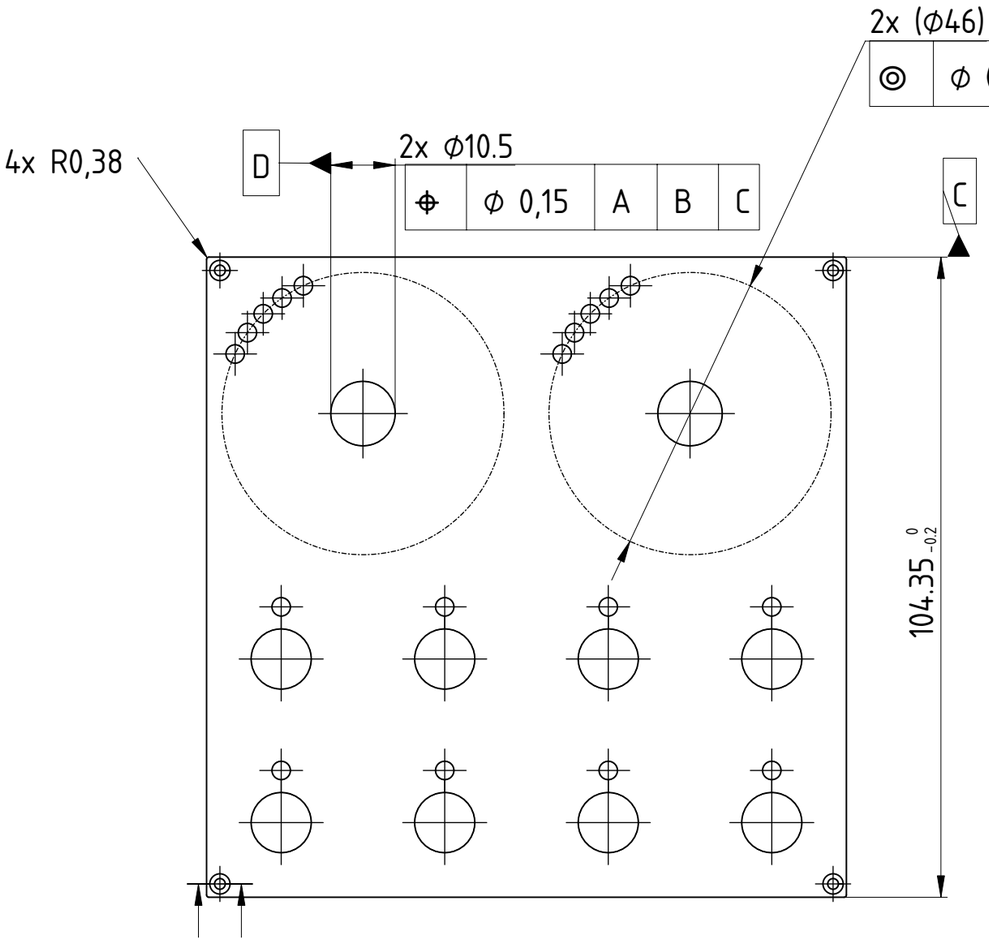

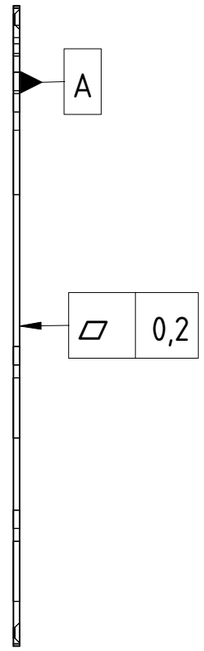

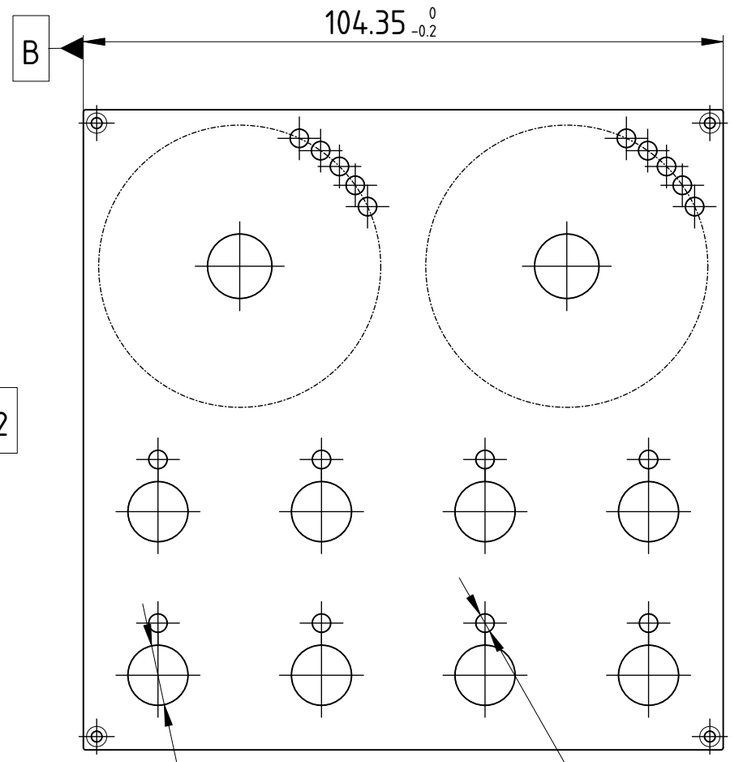

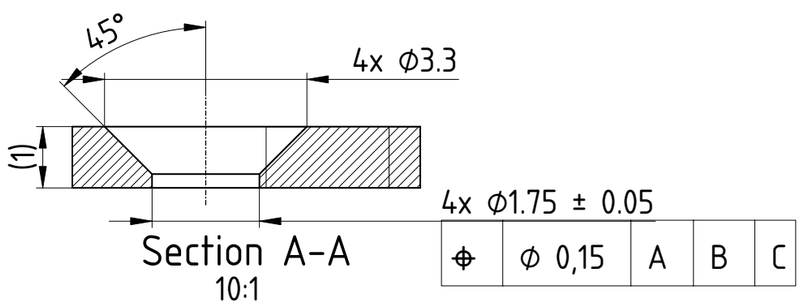

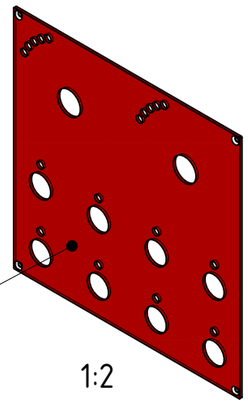

3

Aesthetical surfaces colored red on the view

No scratches, burrs, damages or any kind of protruding material allowed, including the perpendicular surfaces to the aesthetical.

The mid of the datum plane A is preferred to be near to the lower limit of the flatness tolerance zone. It can be achieved with an additional bending step.

STATUS APPROVED DATE: 2024/05/14		TEK2 - frontpanel
COMPANY Intech Studio Ltd.		
REVISION 03		MATERIAL Aluminum 5052-H32
SCALE 1:1	TOLERANCES ISO 2768 - m	COLOR Anodized matte black - RAL code: 9004