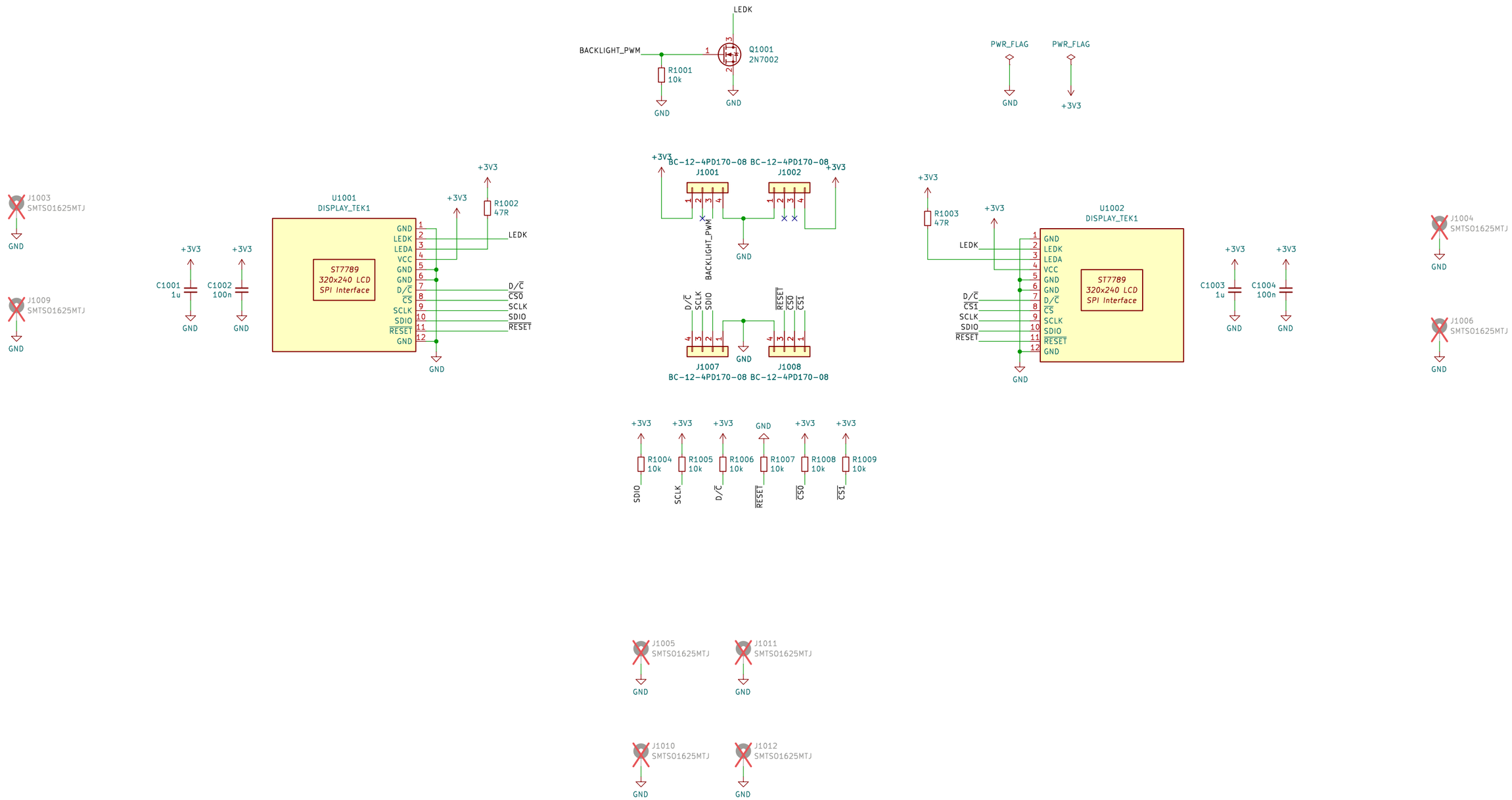


Sheet: /
File: PCBA-VSNX-LCDMOUNT.kicad_sch

**Title:**

| Size: A3 | Date: | Rev: |
|---|---|---|
| KiCad E.D.A. 8.0.6 | | Id: 1/1 |