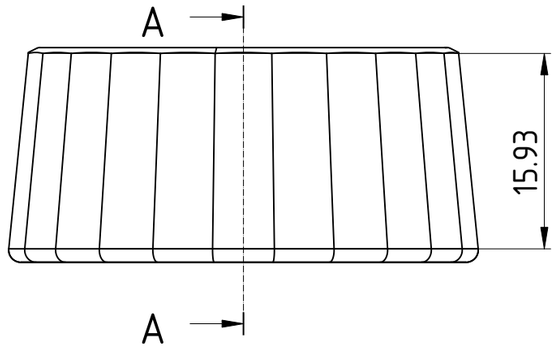

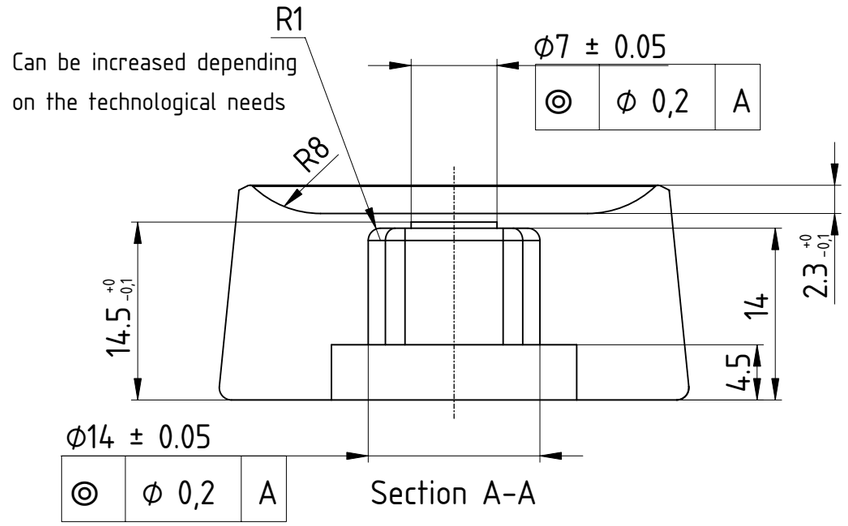

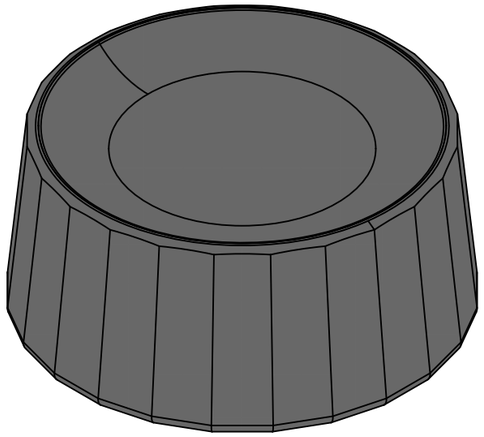

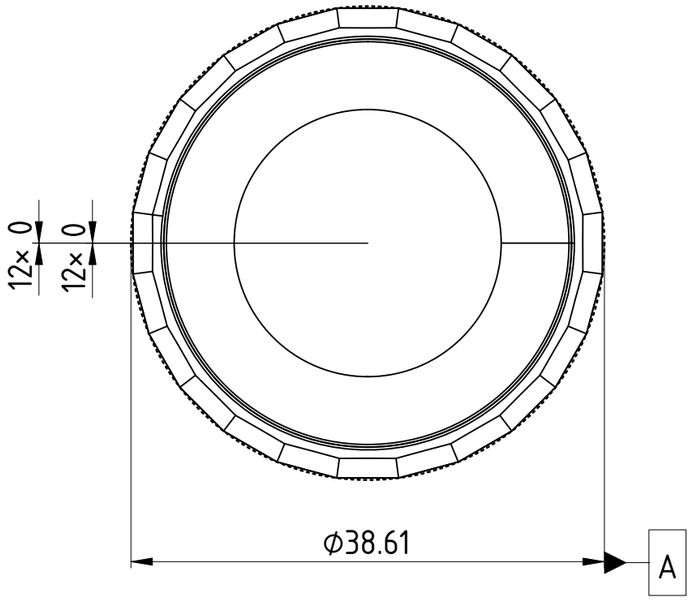

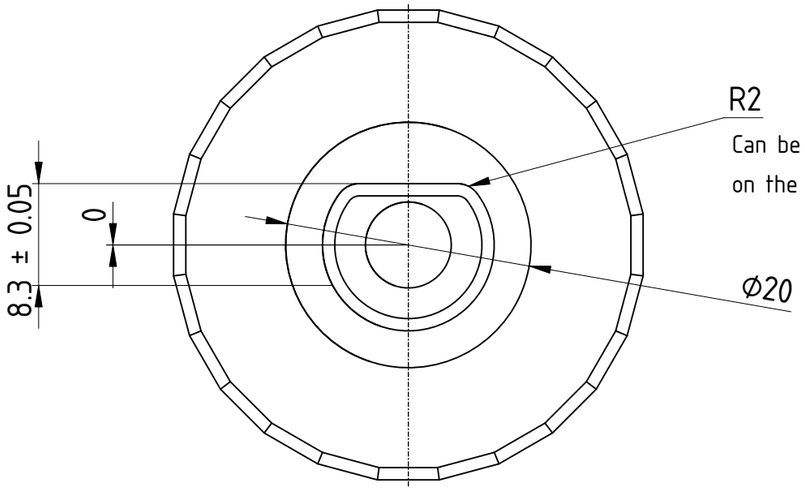

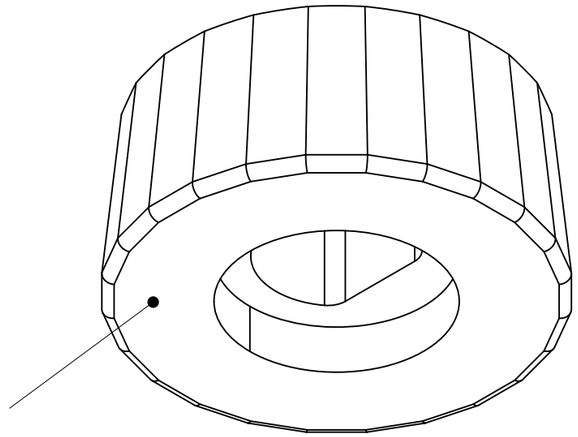

Non-aesthetical side (purple):

Radiuses and chamfers can be adjusted to optimize production

No burrs

STATUS APPROVED DATE: 2024/02/14		KNOB-TEK2
COMPANY Intech Studio Ltd.		
REVISION 02		MATERIAL Aluminum 6061-T6
SCALE 2:1	TOLERANCES DIN 16742-TG5	COLOR Sandblasted, black anodized (RAL code: 9004)