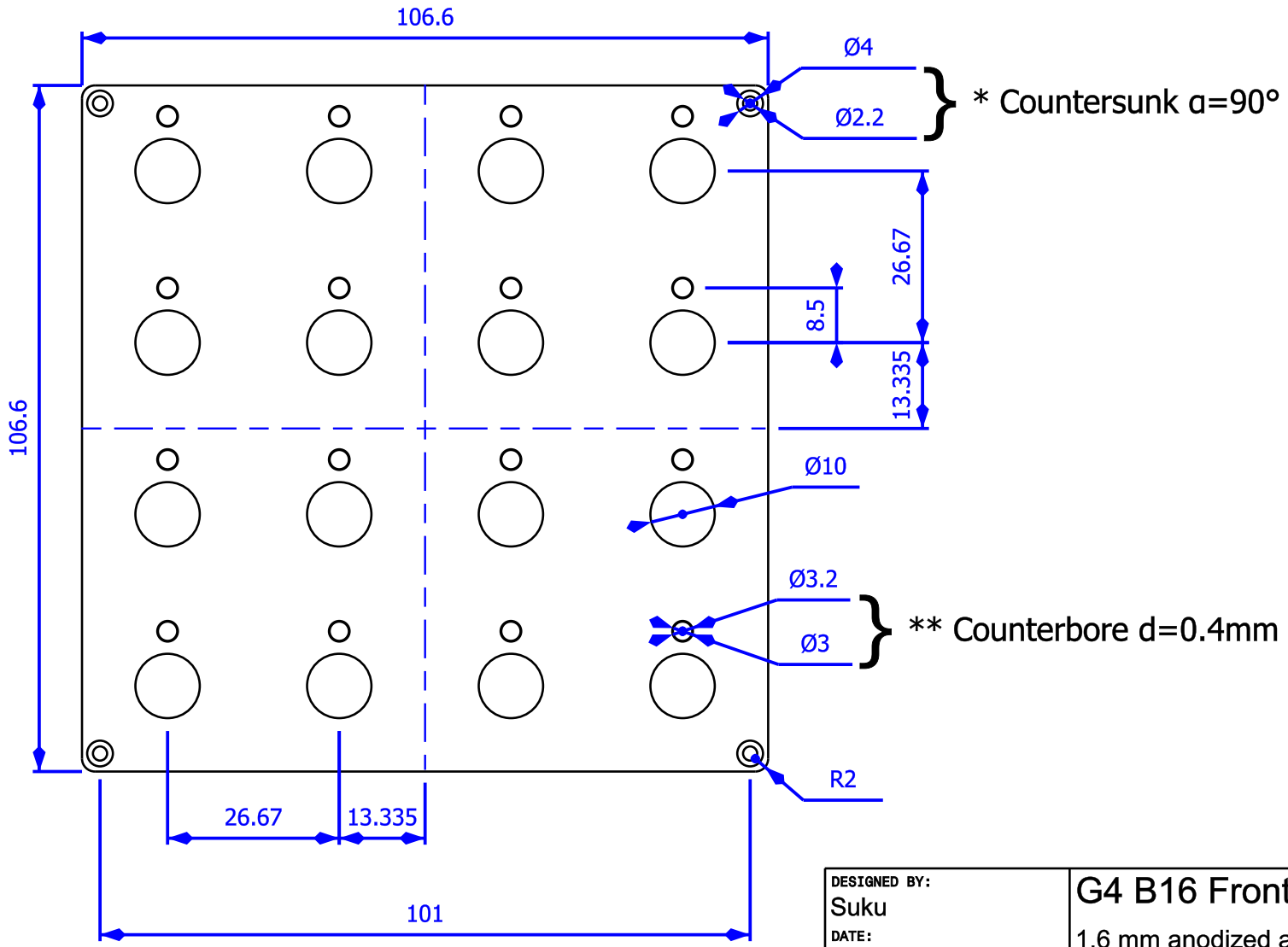

DESIGNED BY: Suku DATE: 2018.10.29.		G4 B16 Frontpanel 1.6 mm anodized aluminum	
SIZE A4			
SCALE 1:1	WEIGHT (kg) 0.040	DRAWING NUMBER Drawing number	SHEET 1/1

This drawing is our property; it can't be reproduced or communicated without our written consent.