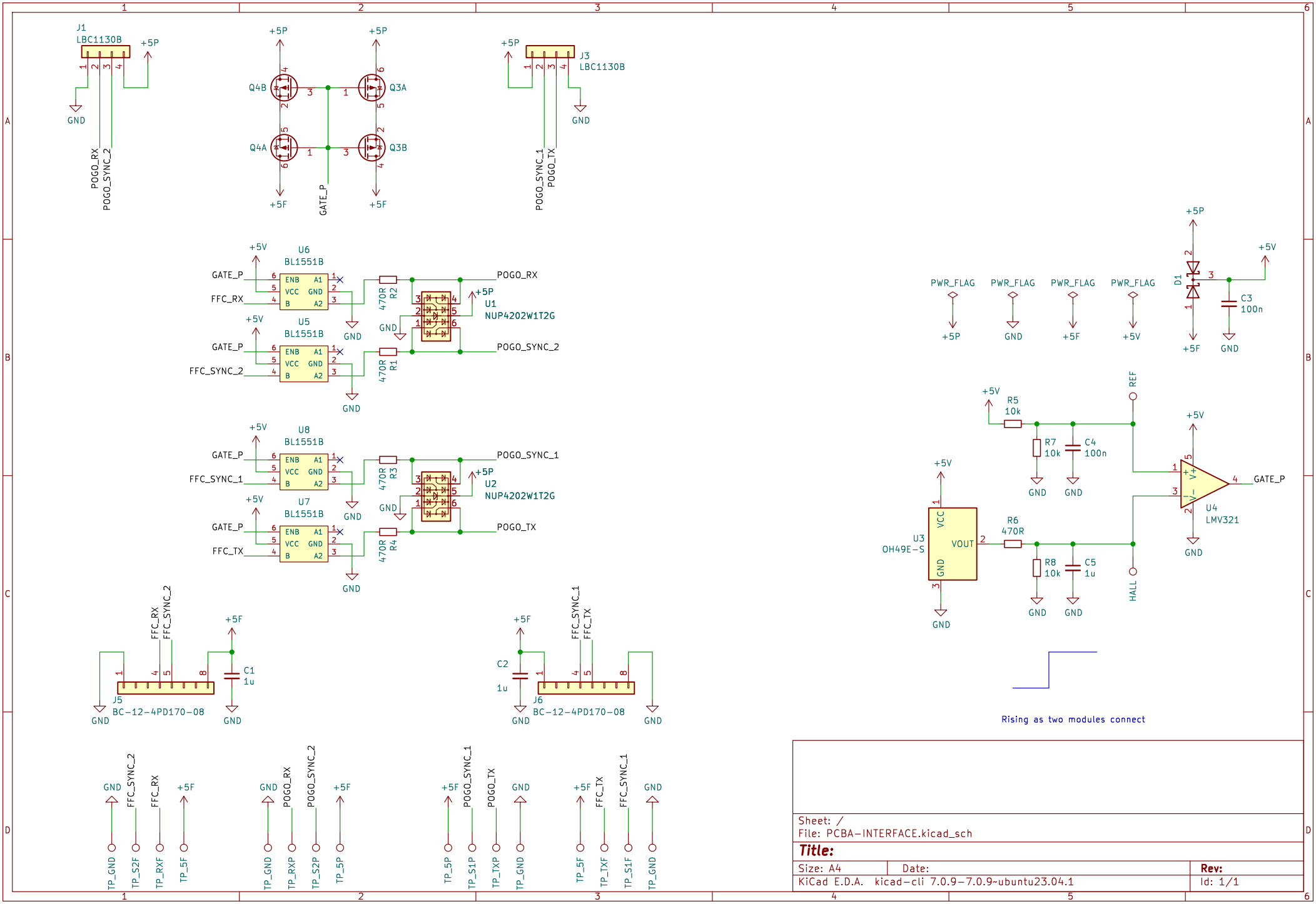

Sheet: /
File: PCBA-INTERFACE.kicad_sch

Title:

Size: A4	Date:	Rev:
KiCad E.D.A. kicad-cli 7.0.9-7.0.9~ubuntu23.04.1		Id: 1/1