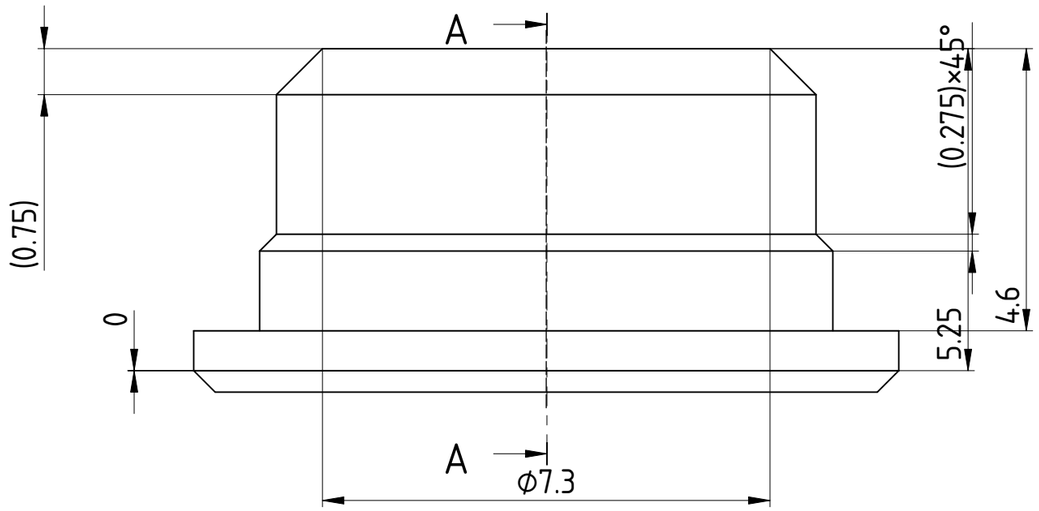

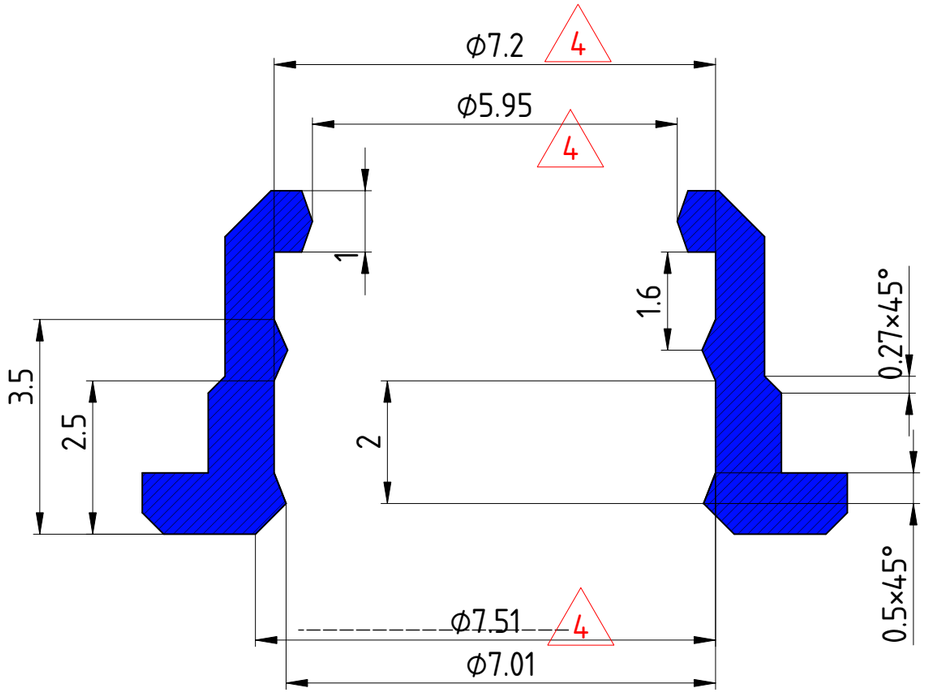

Section A-A

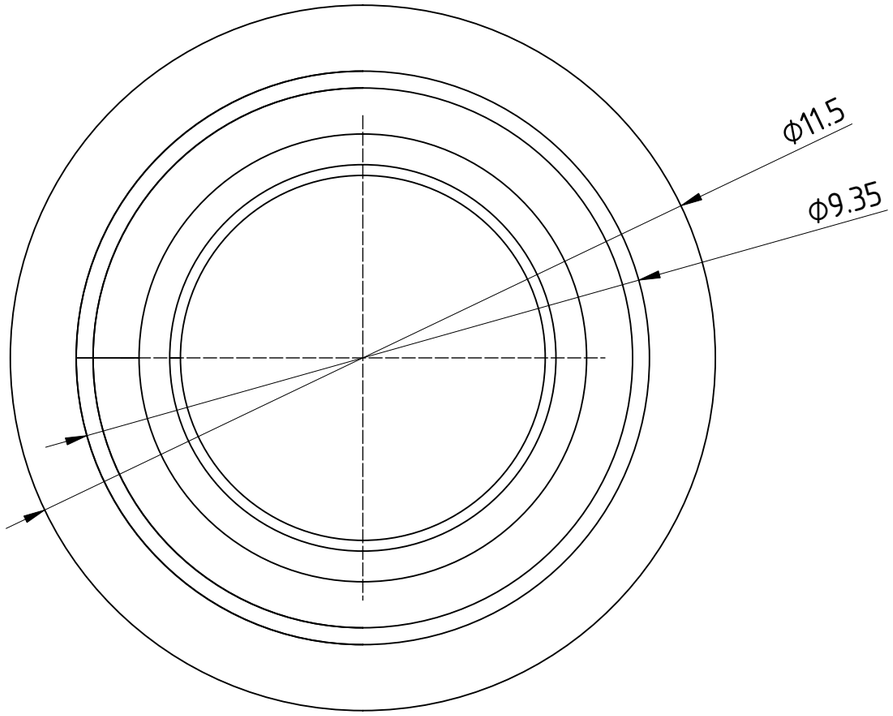

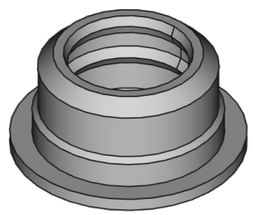

STATUS SAMPLE ORDER DATE: 2024/04/17		PLASTIC - BUSHING - POT
COMPANY Intech Studio Ltd.		
REVISION 04		MATERIAL POM
SCALE 10:1	TOLERANCES +/- 0,1	COLOR Black