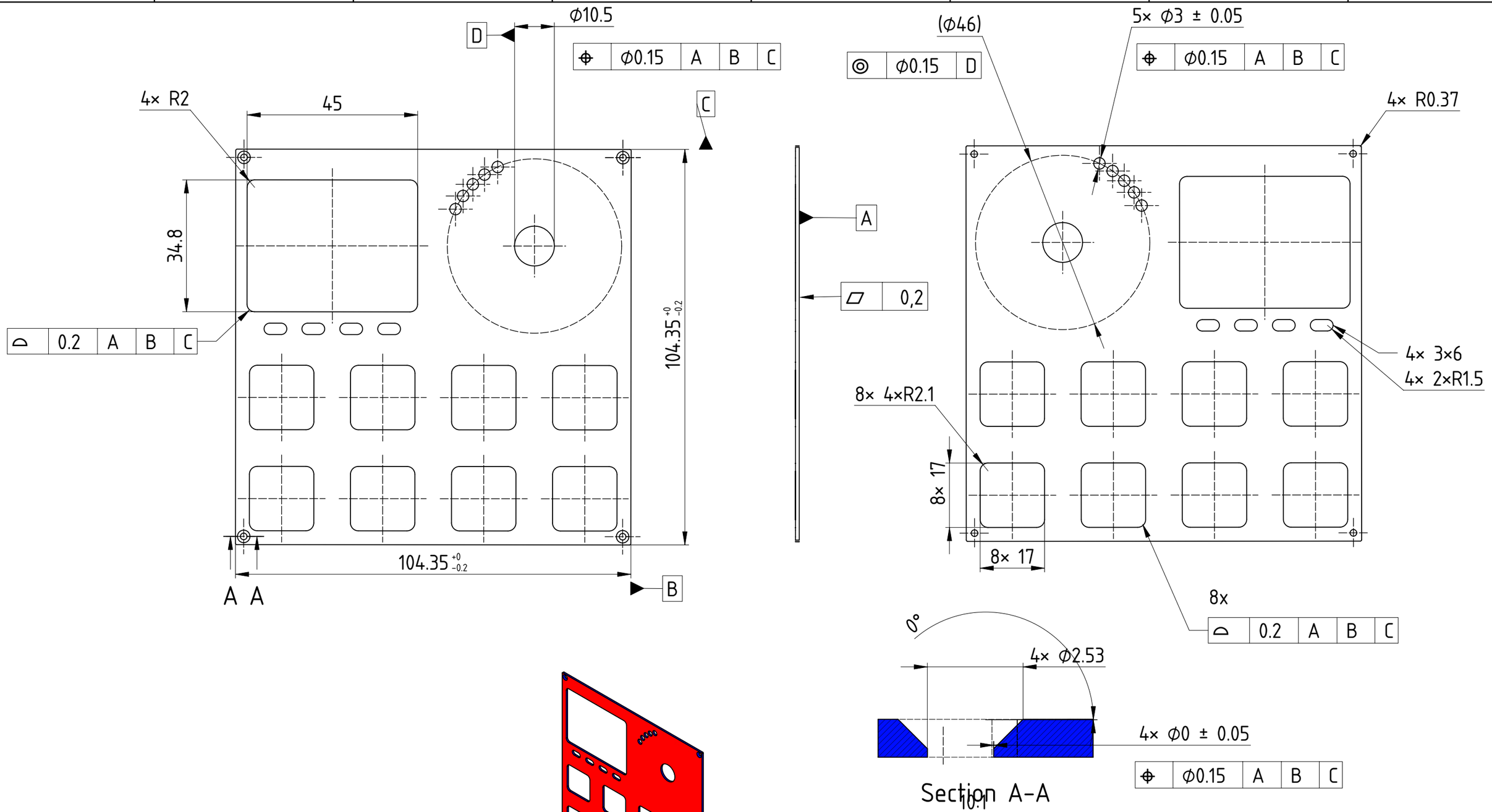

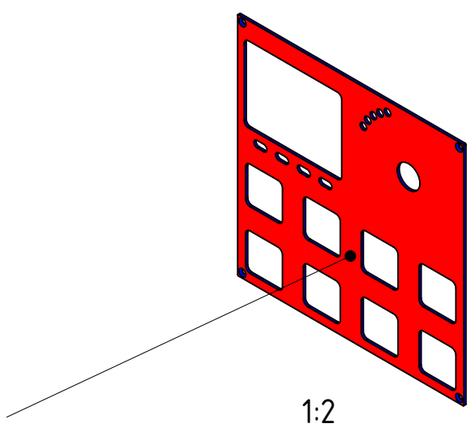

The mid of the datum plane A is preferred to be near
to the lower limit of the flatness tolerance zone.
It can be achieved with an additional bending step.

Aesthetical surfaces colored red on the view
No scratches, burrs or any kind of damage allowed!

Functional surfaces colored blue on the view (all which perpendicular to the aesthetical)
No burrs or other protruding material allowed!

STATUS PRELIMINARY DATE: 2024/07/29	VSN1-frontpanel
COMPANY Intech Studio Ltd.	
REVISION 01	MATERIAL Aluminum 5052-H32
SCALE 1:1 / TOLERANCES ISO 2768 - m	COLOR Anodized matte black - RAL code: 9004