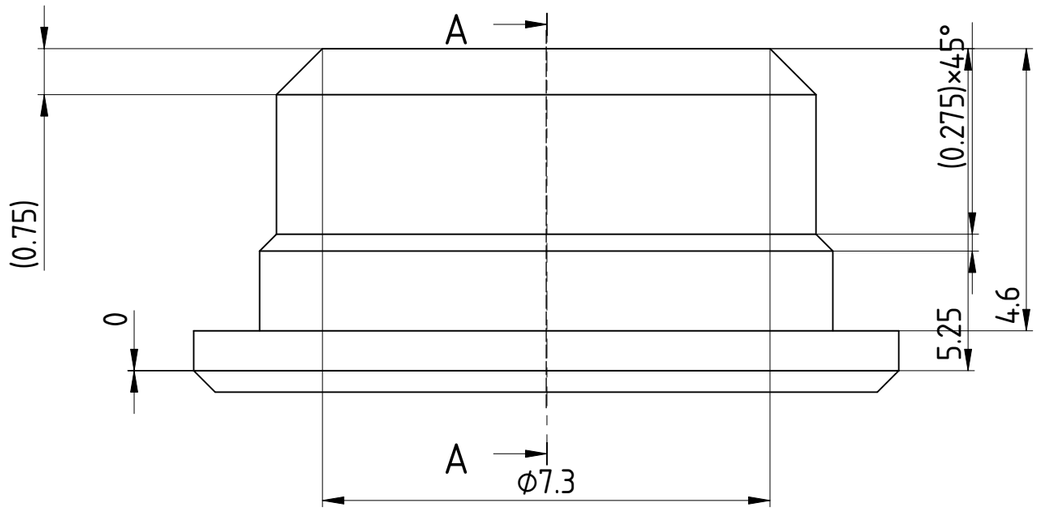


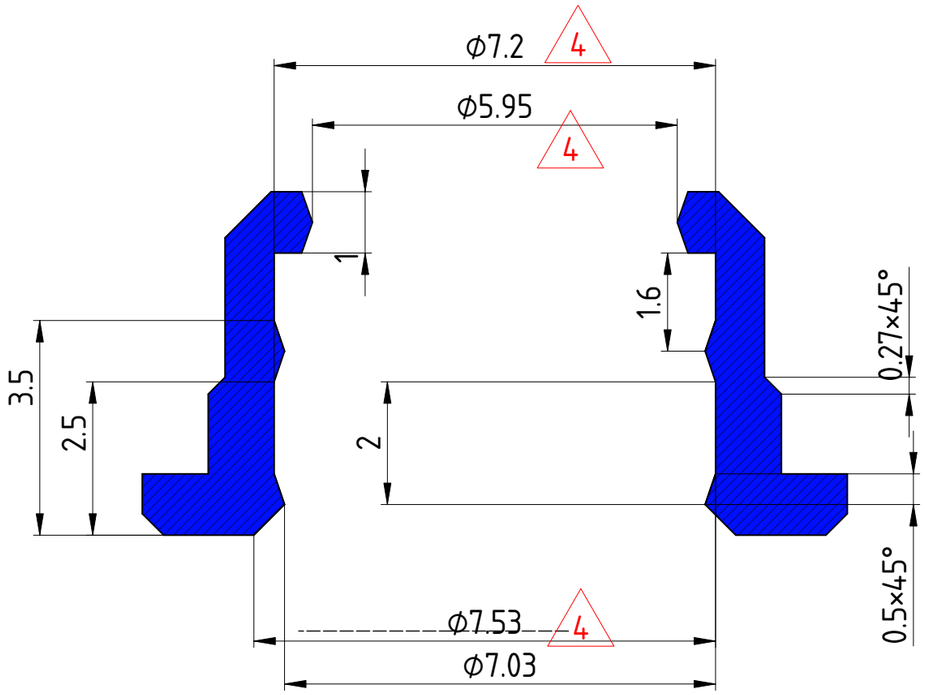


Section A-A

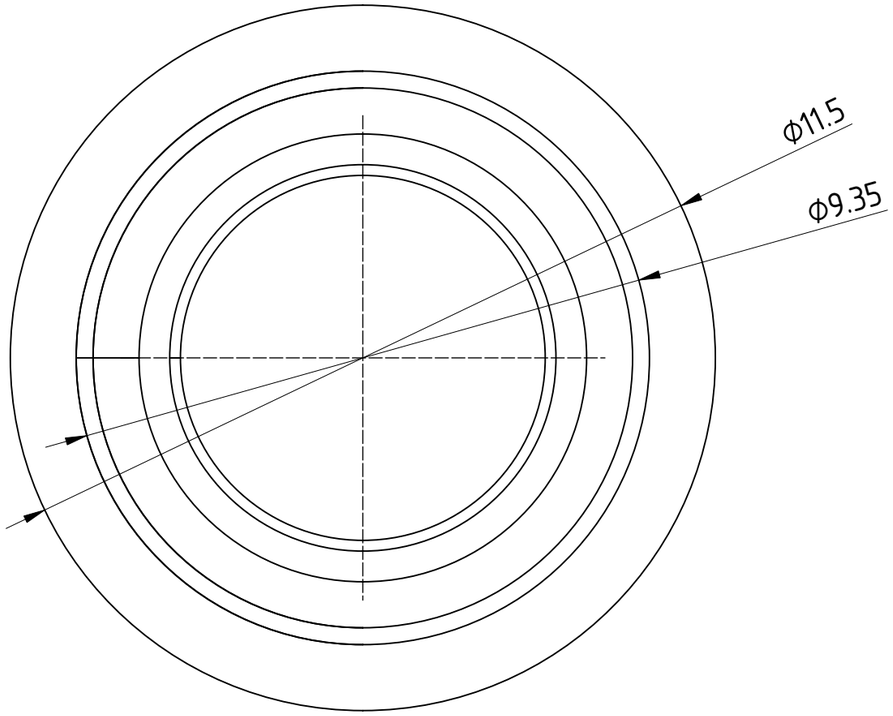


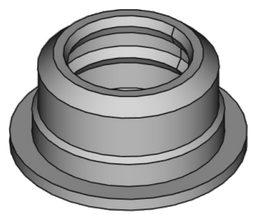

| | | |
|---|---|---|
| STATUS<br>SAMPLE ORDER<br>DATE:<br>2024/04/17 | | PLASTIC - BUSHING - POT |
| COMPANY<br>Intech Studio Ltd. | | |
| REVISION<br>04 | | MATERIAL<br>POM |
| SCALE<br>10:1 | TOLERANCES<br>+/- 0,1 | COLOR<br>Black |