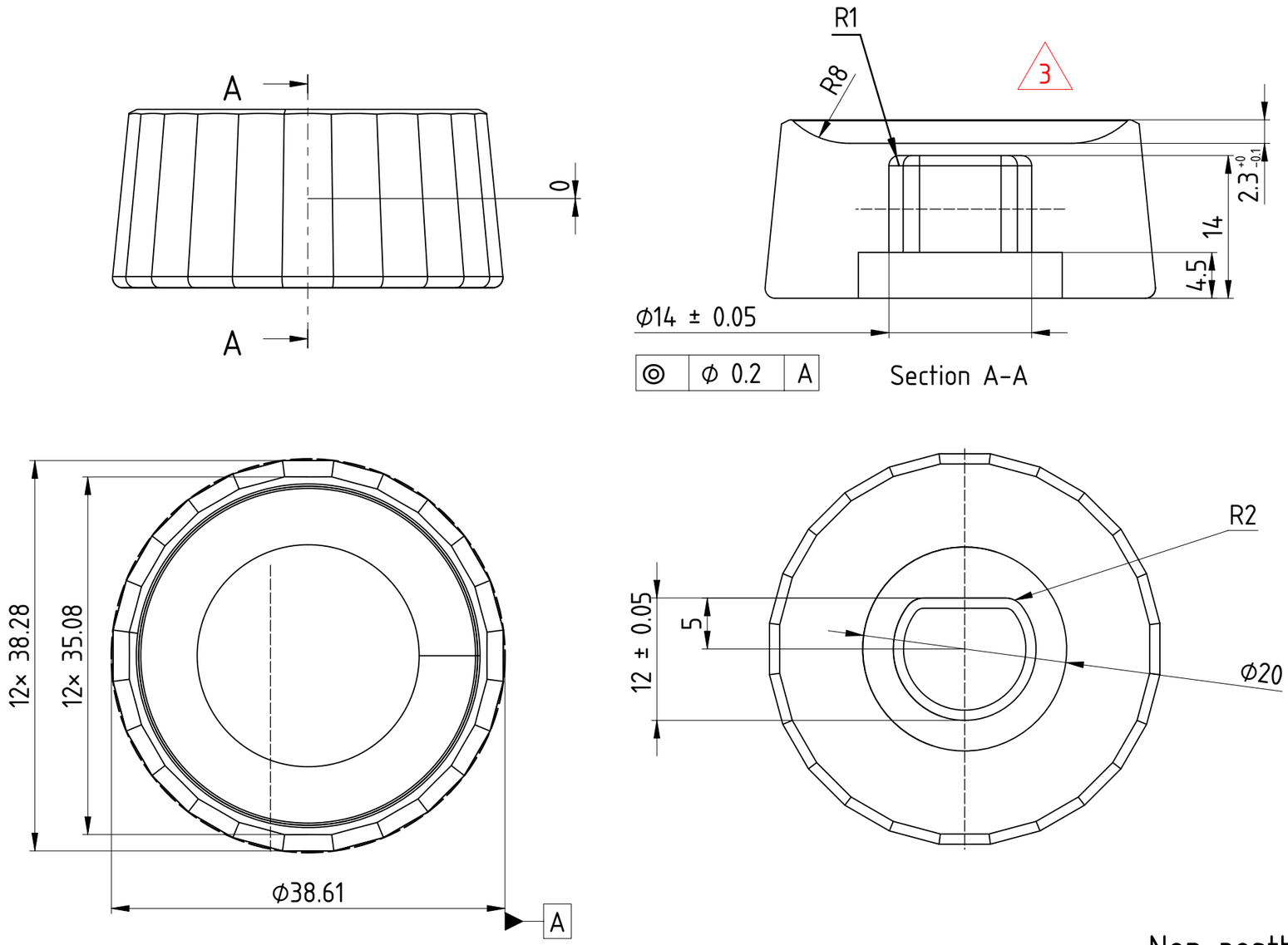

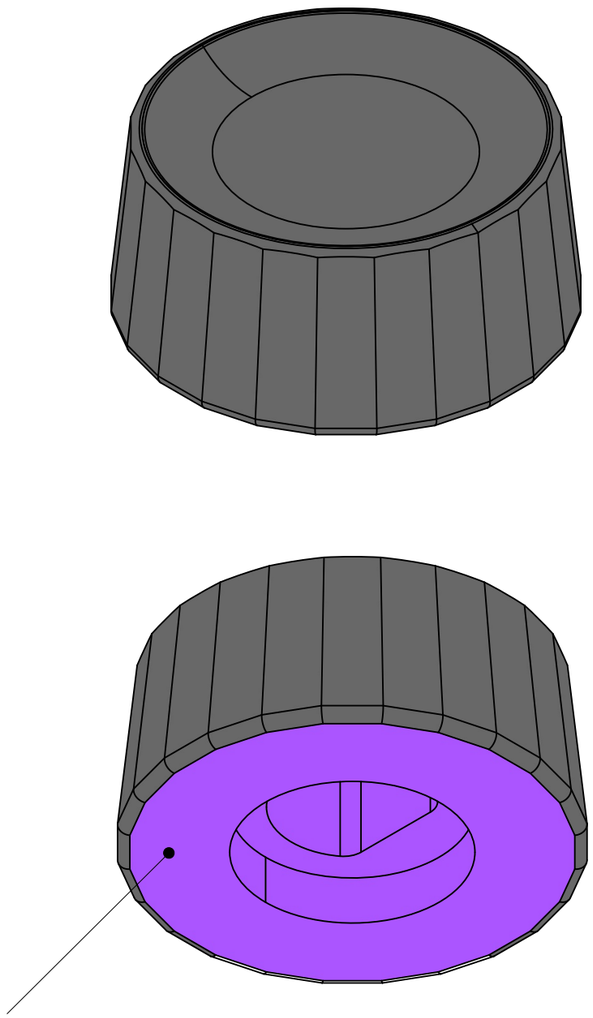

Non-aesthetical side (purple):

No burrs

STATUS APPROVED DATE: 2024/08/27		KNOB-TEK2
COMPANY Intech Studio Ltd.		
REVISION 03		MATERIAL Aluminum 6061-T6
SCALE 2:1	TOLERANCES DIN 16742-TG5	COLOR Sandblasted, black anodized (RAL code: 9004)