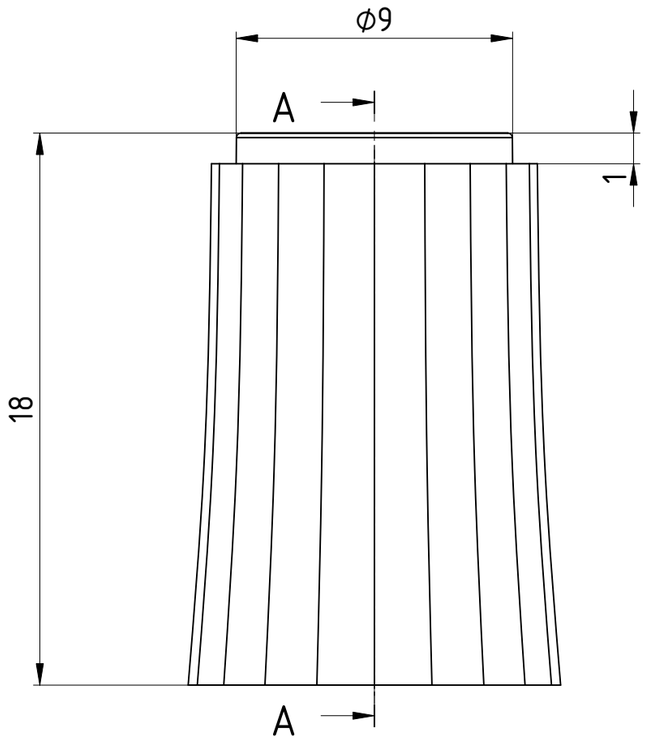

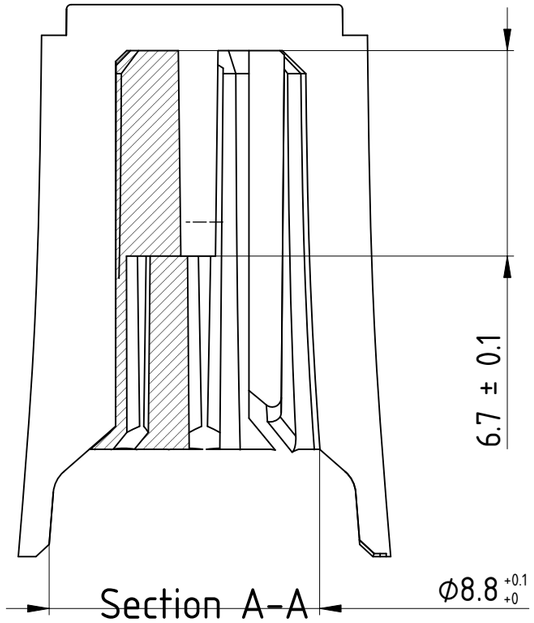

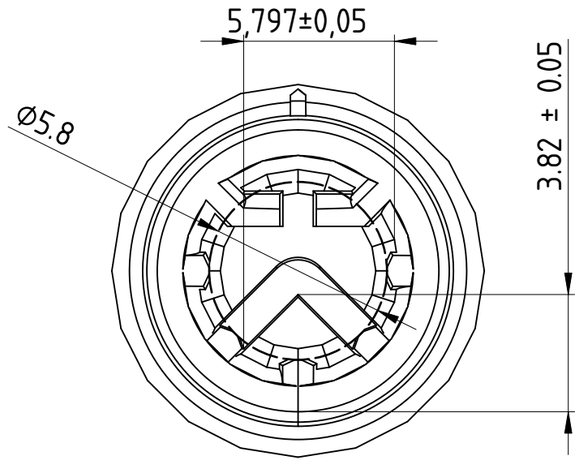

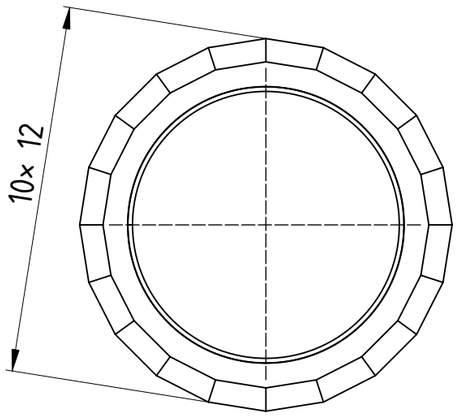

NO EJECTION MARKS

FREE OF ANY DEFECTS

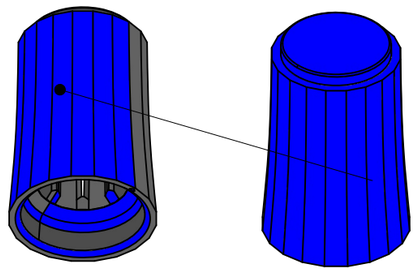

STATUS APPROVED DATE: 2024/01/02		PLASTIC - KNOB - ENC
COMPANY Intech Studio Ltd.		
REVISION 02		MATERIAL ABS - Terluran GP22
SCALE 5:1	TOLERANCES DIN 16742-TG4	COLOR Black - RAL code: 9004