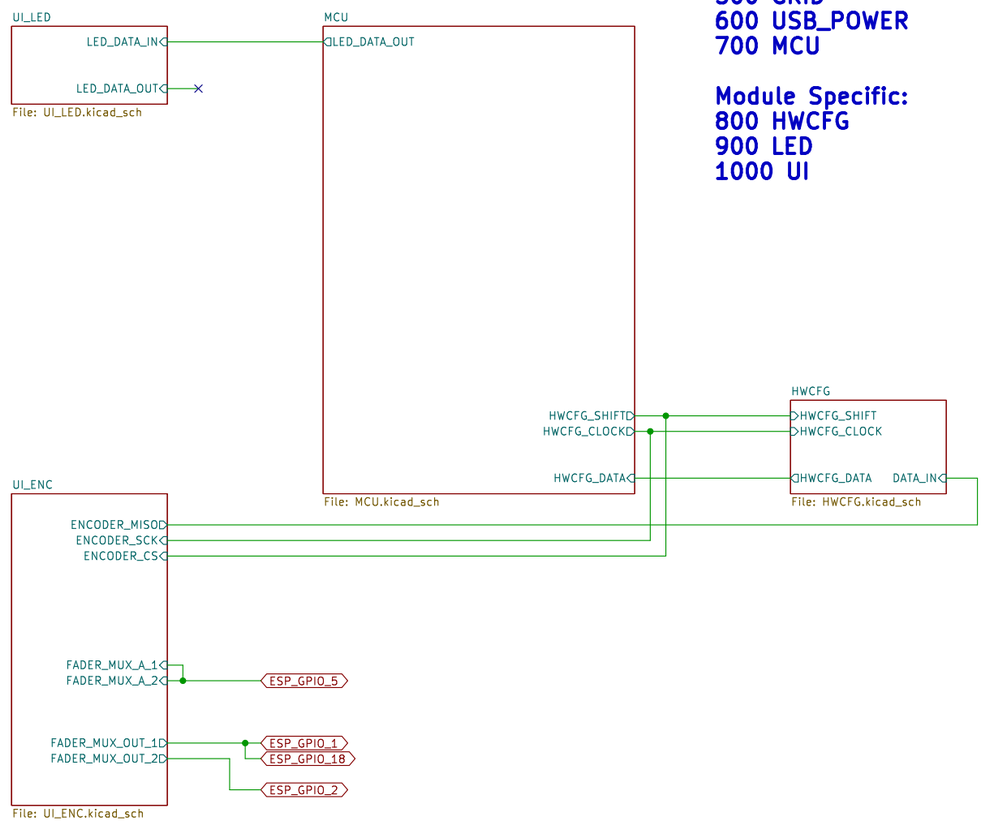


**Common Sheets:**
**500 GRID**
**600 USB_POWER**
**700 MCU**

**Module Specific:**
**800 HWCFG**
**900 LED**
**1000 UI**

Sheet: /
File: PCBA-EF44.kicad_sch

**Title:**

| Size: A3 | Date: | Rev: |
|---|---|---|
| KiCad E.D.A. 8.0.8 | | Id: 1/11 |

# 600

## USB Port

USB C upstream facing port configured for 5V 3A power consumption.

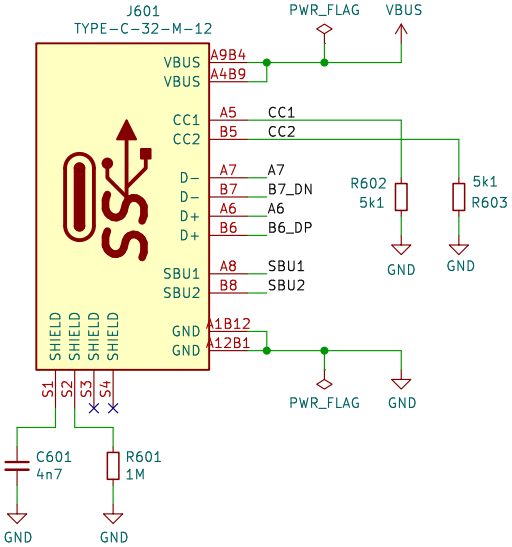


## ESD Prot.

ESP protection for all 8 signals externally accessable via the USB C connector.

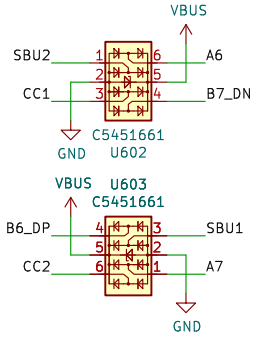


## Debug-Mode Multiplexing

Debug.mode is activated when both CC1 and CC2 are pulled to logic high externally.

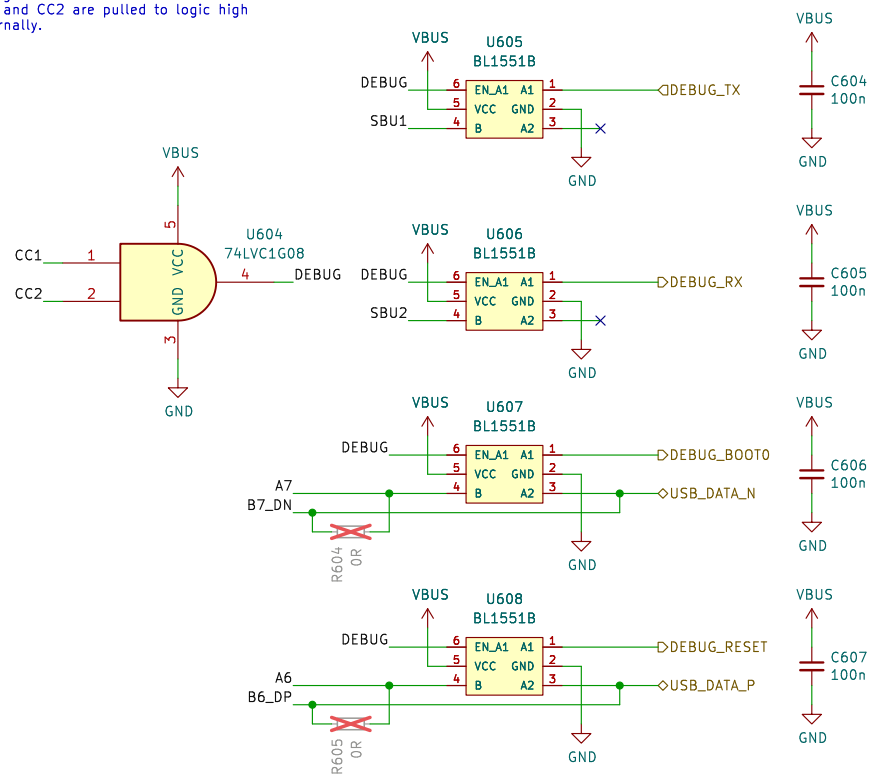


## 3V3 LDO

LDO regulator for generating the +3V3 power rail for the microcontroller and UI.

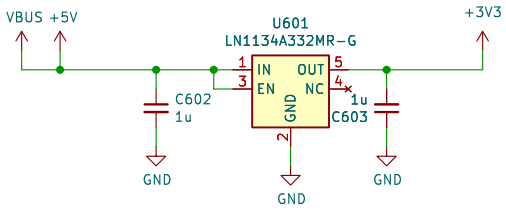


## Testpoints

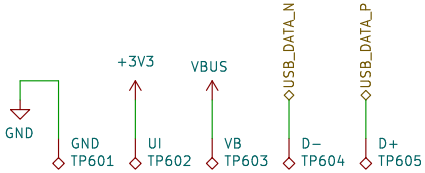


Sheet: /MCU/USB_POWER/
File: USB_POWER.kicad_sch

**Title:**

| Size: A4 | Date: | Rev: |
|---|---|---|
| KiCad E.D.A. 8.0.8 | | Id: 2/11 |

# 900

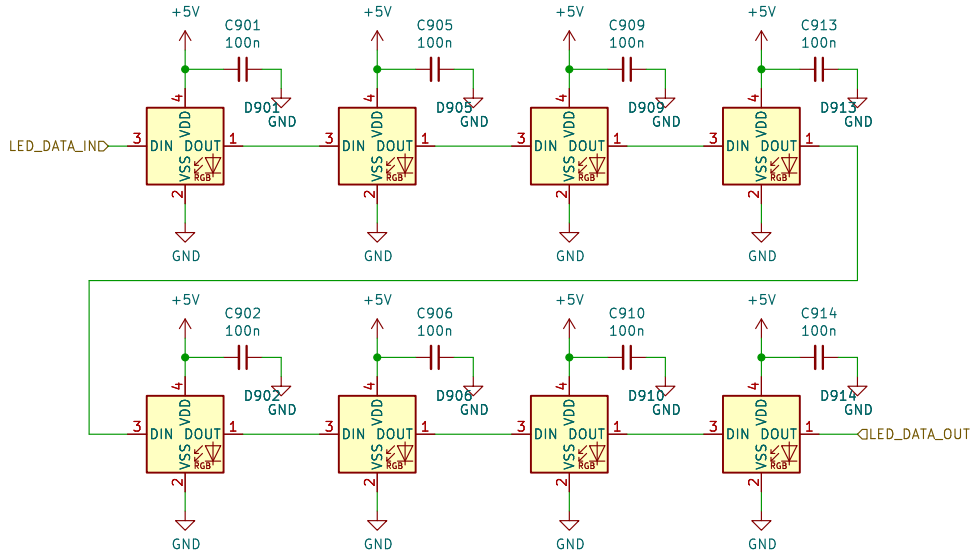


Sheet: /UI_LED/
File: UI_LED.kicad_sch

**Title:**

| Size: A4 | Date: | Rev: |
|---|---|---|
| KiCad E.D.A. 8.0.8 | | Id: 4/11 |

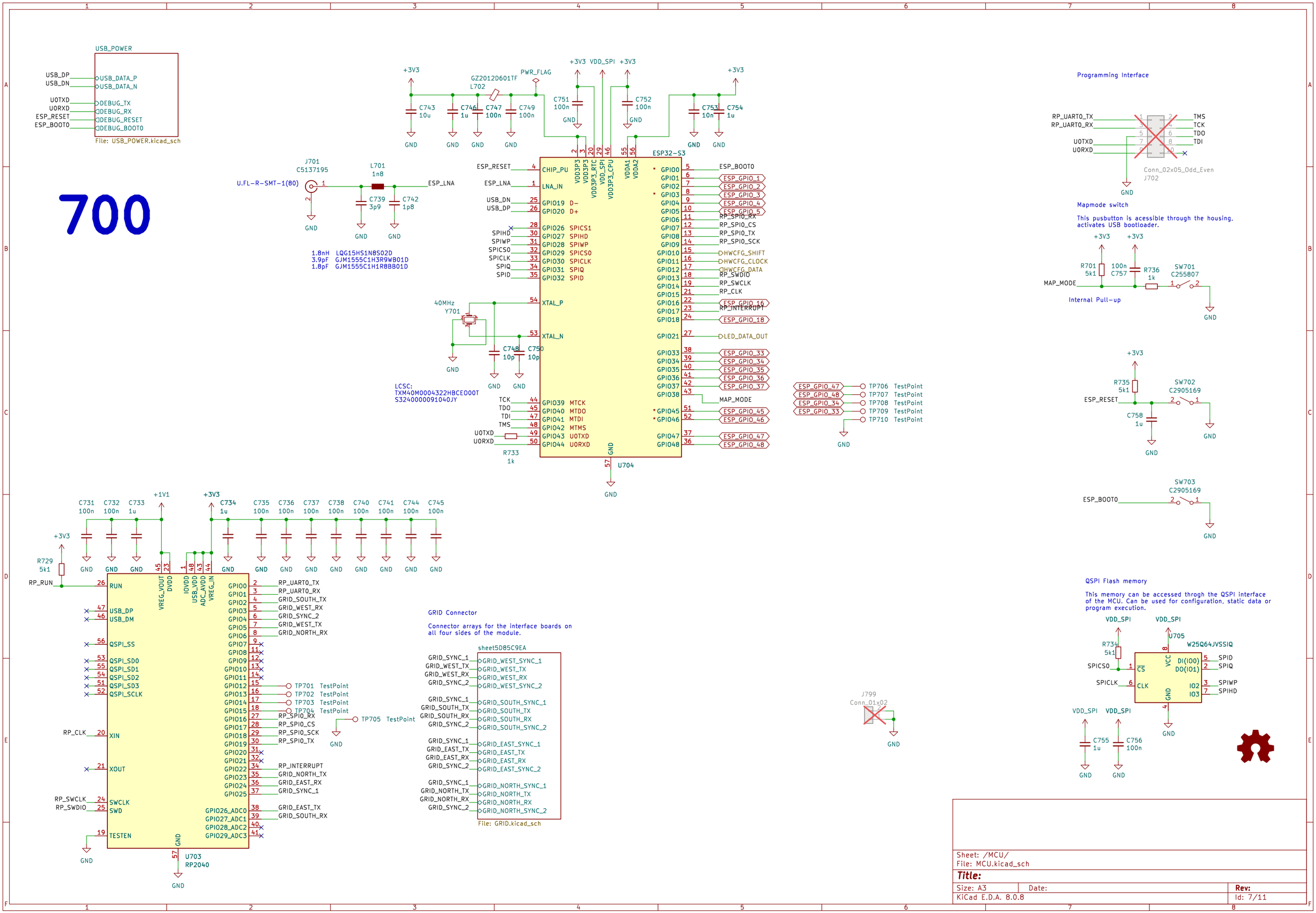


Sheet: /MCU/
File: MCU.kicad_sch

**Title:**

| Size: A3 | Date: | Rev: |
|---|---|---|
| KiCad E.D.A. 8.0.8 | | Id: 7/11 |

GRID Connector
Bi-Directional Data
2x SYNC

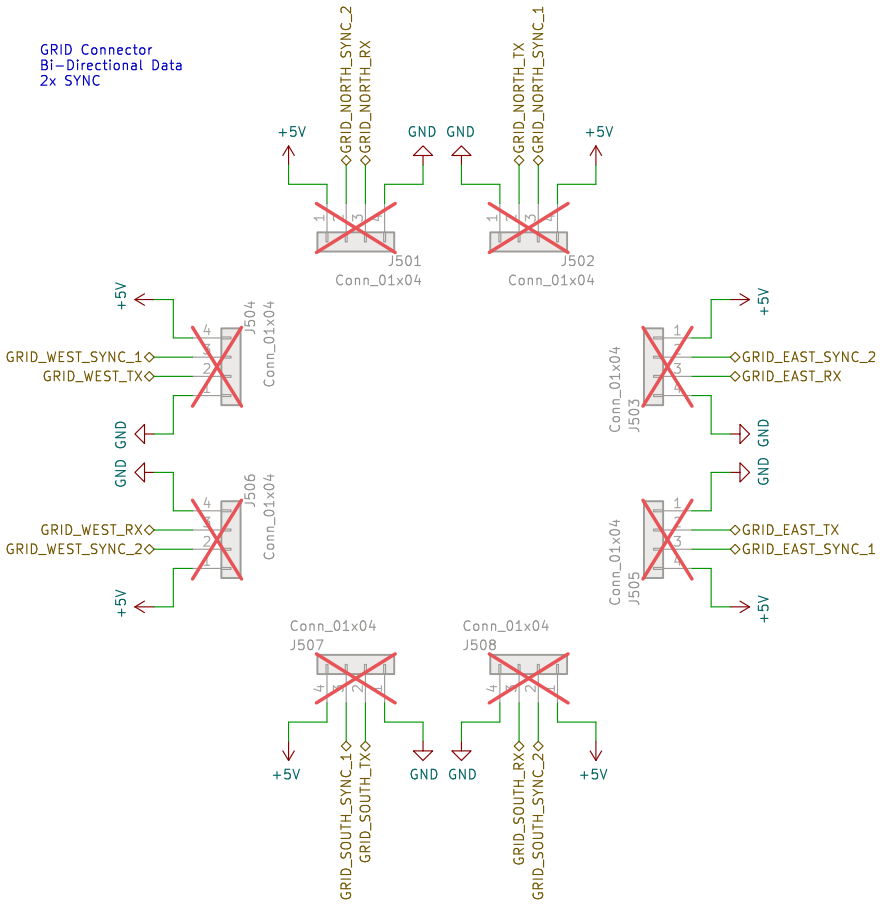


Board Mounting Pattern

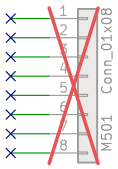


500

Sheet: /MCU/sheet5D85C9EA/
File: GRID.kicad_sch

**Title:**

| Size: A4 | Date: | **Rev:** |
|---|---|---|
| KiCad E.D.A. 8.0.8 | | Id: 8/11 |

# 800

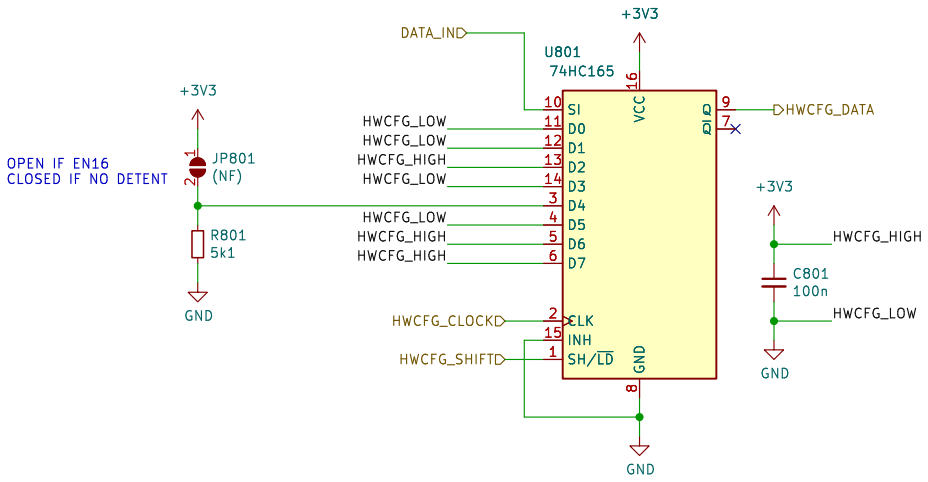


Board Identification

Grid firmware can identify the hardware and the board revision thorugh a 3 wire serial interface using one or more shift register as read only memory. The content of the memory is defined by pulling the inputs high or low through pcb traces or solderable configuration jumpers.

4b'Model + 4b'Revision + nb'Reserved (Multiple shift registers)

D0: MODEL (LSB)
D1: MODEL
D2: MODEL
D3: MODEL (MSB)
D4: REVISION (LSB)
D5: REVISION
D6: REVISION
D7: REVISION (MSB)

Model Codes (D3–D0):

Po16 0000
Bo16 0001
PBF4 0010
EN16 0011
...

Revision Codes (D7–D4):

RevA 0000
RevB 0001
RevC 0010
RevD 0011
...

| | | |
|---|---|---|
| Sheet: /HWCFG/<br>File: HWCFG.kicad_sch | | |
| **Title:** | | |
| Size: A4 | Date: | **Rev:** |
| KiCad E.D.A. 8.0.8 | | Id: 10/11 |

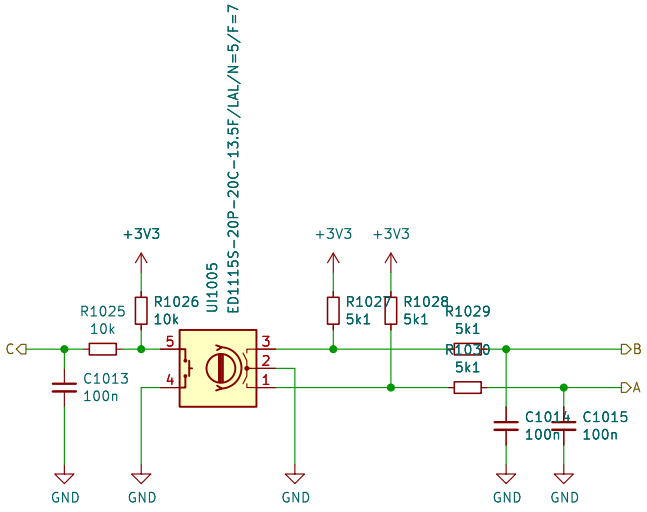


Sheet: /UI_ENC/ENCODER_0/
File: UI_ENC_FILTER.kicad_sch

**Title:**

| Size: A4 | Date: | Rev: |
|---|---|---|
| KiCad E.D.A. 8.0.8 | | Id: 11/11 |

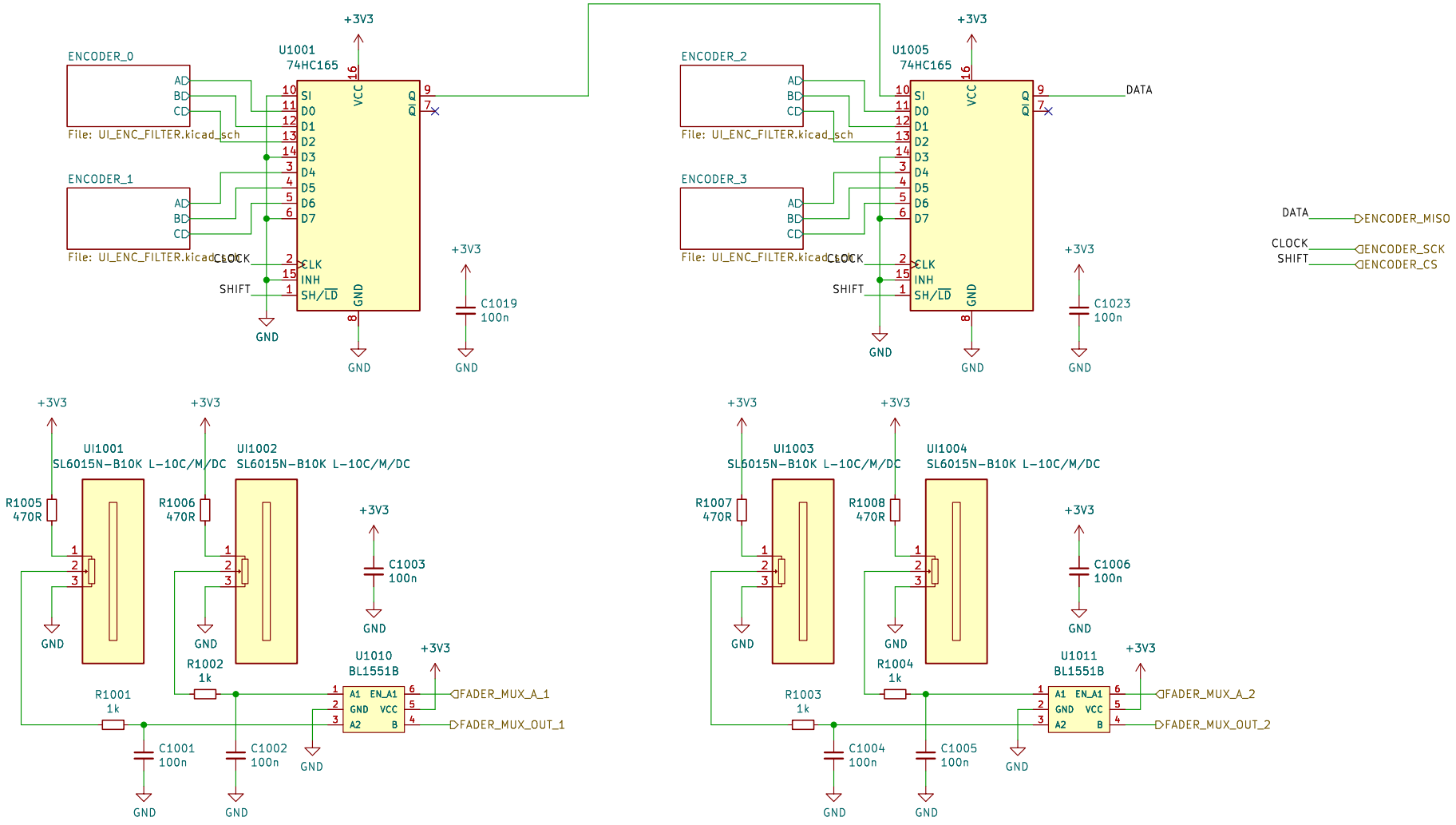


Sheet: /UI_ENC/
File: UI_ENC.kicad_sch

**Title:**

| Size: A4 | Date: | Rev: |
|---|---|---|
| KiCad E.D.A. 8.0.8 | | Id: 13/11 |

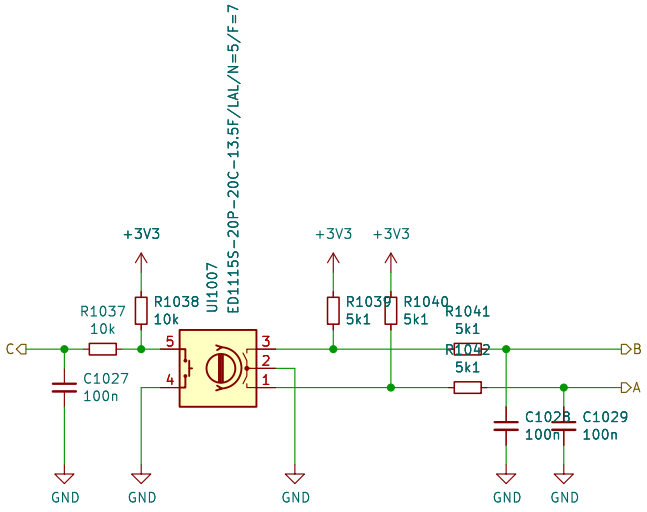


Sheet: /UI_ENC/ENCODER_3/
File: UI_ENC_FILTER.kicad_sch

**Title:**

| Size: A4 | Date: | Rev: |
|---|---|---|
| KiCad E.D.A. 8.0.8 | | Id: 14/11 |

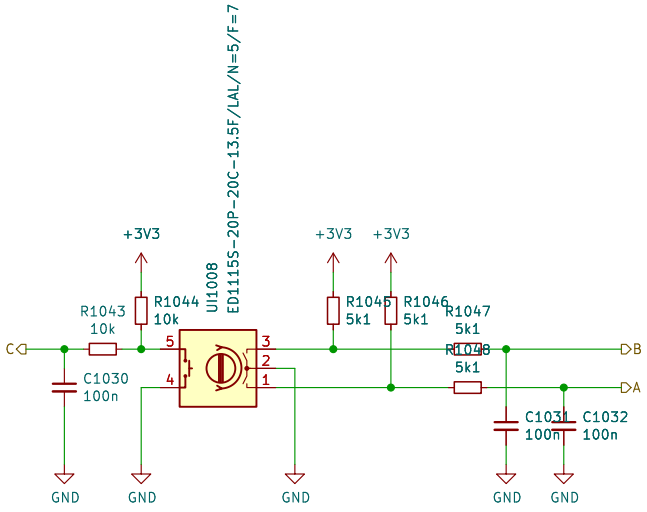


Sheet: /UI_ENC/ENCODER_1/
File: UI_ENC_FILTER.kicad_sch

**Title:**

| Size: A4 | Date: | Rev: |
|---|---|---|
| KiCad E.D.A. 8.0.8 | | Id: 15/11 |

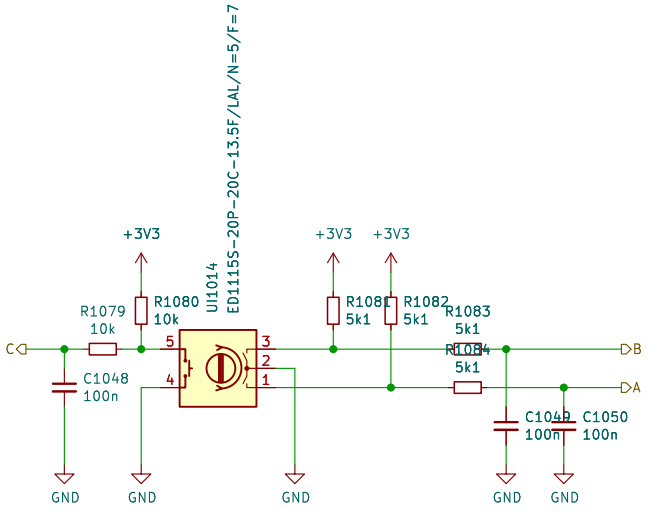


Sheet: /UI_ENC/ENCODER_2/
File: UI_ENC_FILTER.kicad_sch

**Title:**

| Size: A4 | Date: | **Rev:** |
|---|---|---|
| KiCad E.D.A. 8.0.8 | | Id: 21/11 |