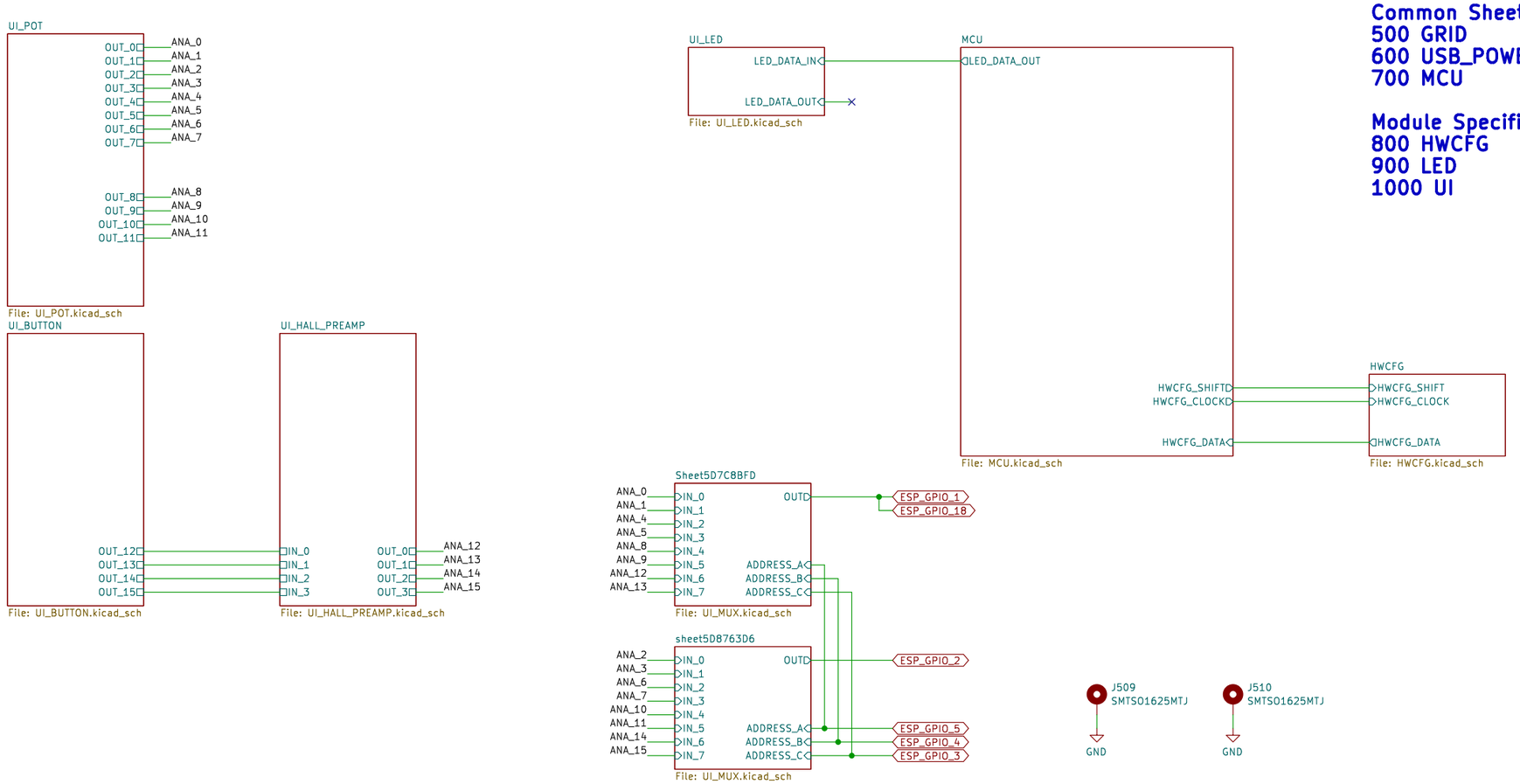


**Common Sheets:**
**500 GRID**
**600 USB_POWER**
**700 MCU**

**Module Specific:**
**800 HWCFG**
**900 LED**
**1000 UI**

Sheet: /
File: PCBA-PBF4.kicad_sch

**Title:**

| Size: A3 | Date: | Rev: |
|---|---|---|
| KiCad E.D.A. 8.0.8 | | Id: 1/15 |

# 1000

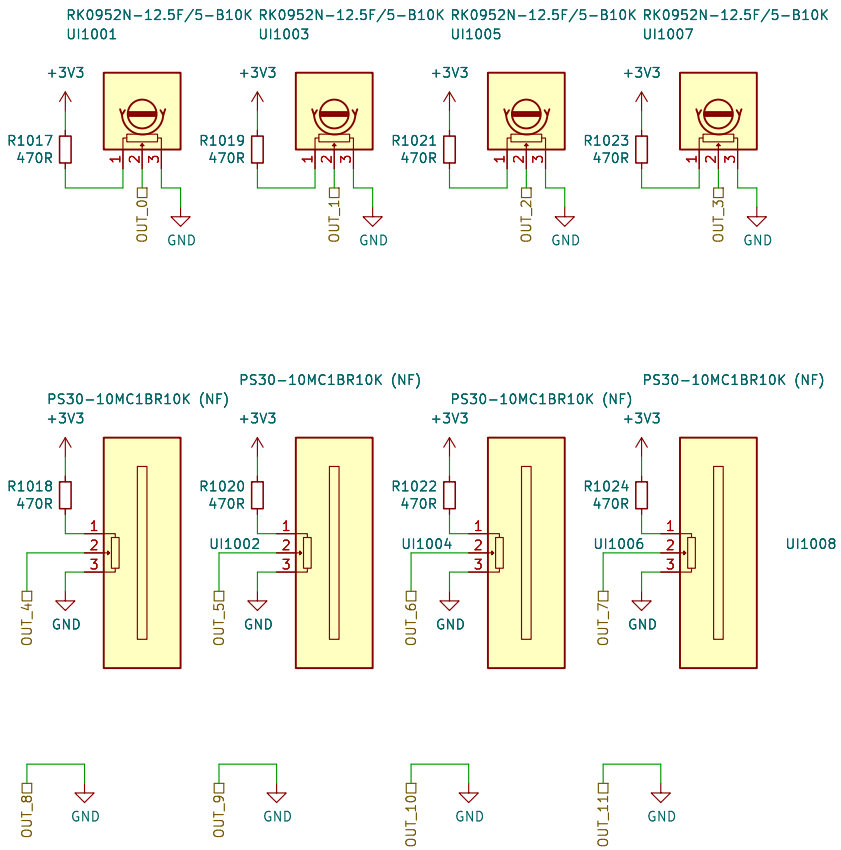


Sheet: /UI_POT/
File: UI_POT.kicad_sch

**Title:**

| Size: A4 | Date: | Rev: |
|---|---|---|
| KiCad E.D.A. 8.0.8 | | Id: 2/15 |

# 1000

Simulation:

http://tinyurl.com/y229mty4

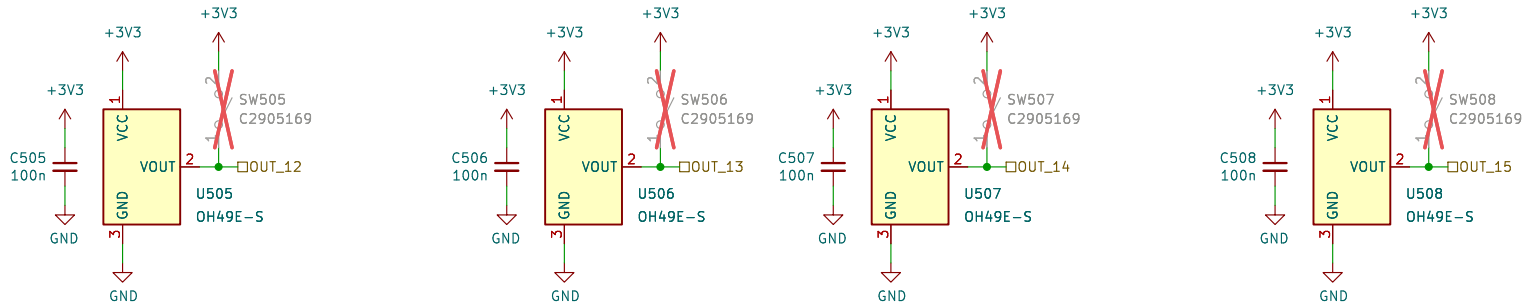


Sheet: /UI_BUTTON/
File: UI_BUTTON.kicad_sch

**Title:**

| Size: A4 | Date: | Rev: |
|---|---|---|
| KiCad E.D.A. 8.0.8 | | Id: 3/15 |

# 900

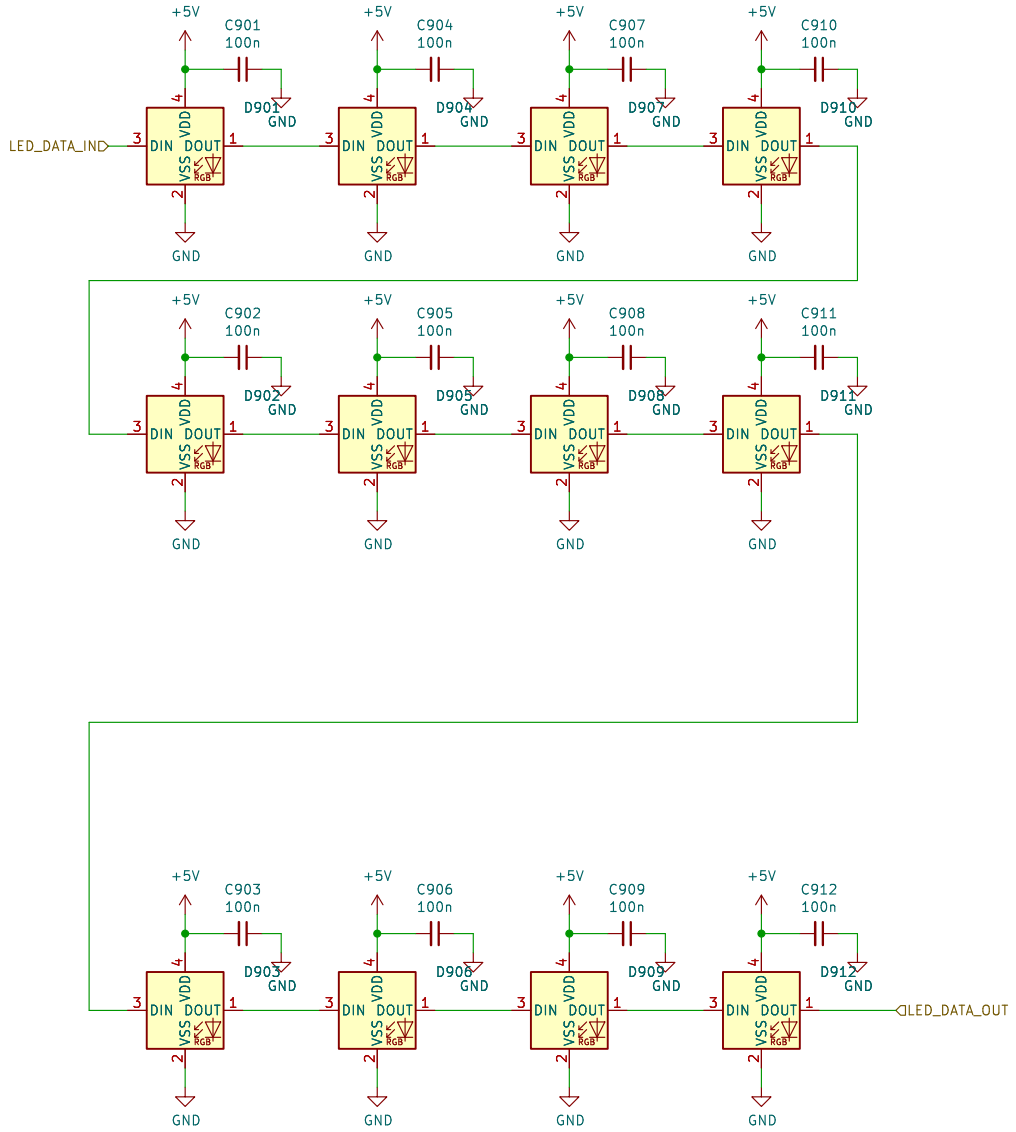


Sheet: /UI_LED/
File: UI_LED.kicad_sch

**Title:**

| Size: A4 | Date: | **Rev:** |
|---|---|---|
| KiCad E.D.A. 8.0.8 | | Id: 4/15 |

# 1000

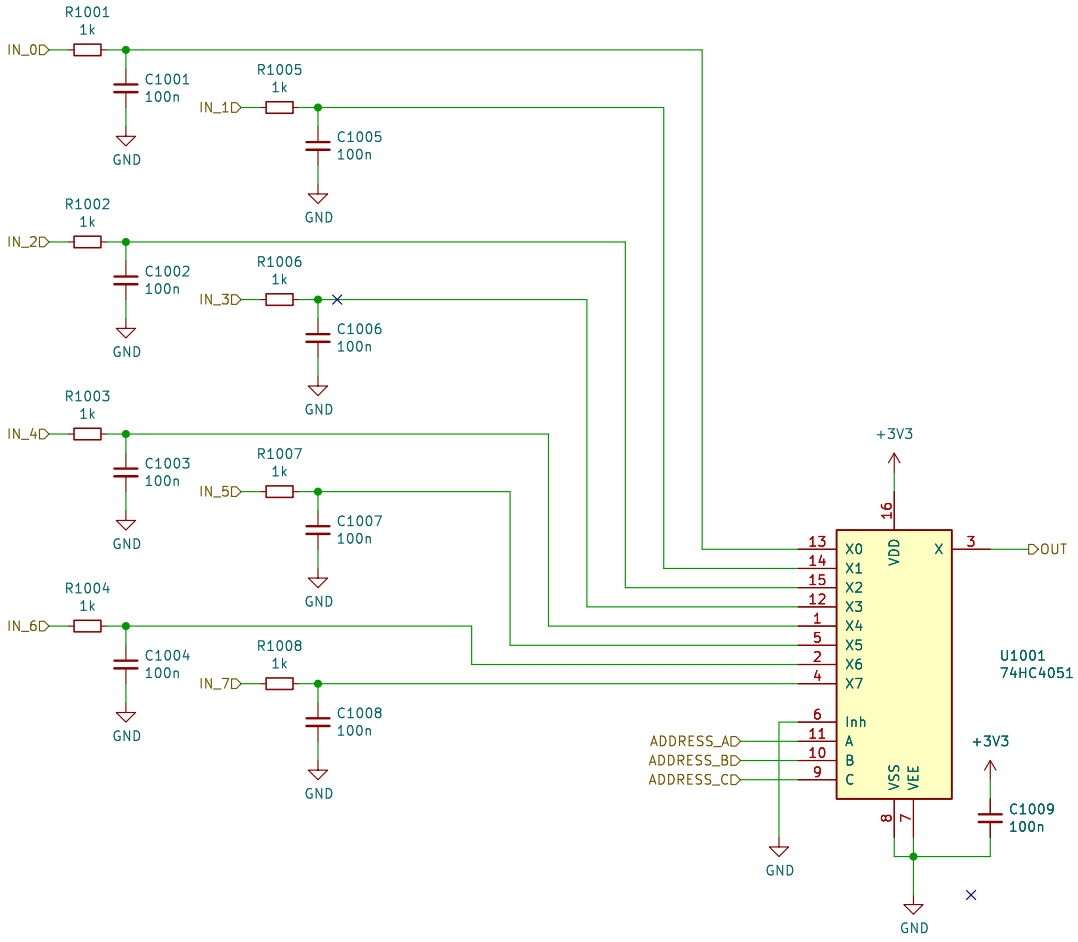


Sheet: /Sheet5D7C8BFD/
File: UI_MUX.kicad_sch

**Title:**

| Size: A4 | Date: | Rev: |
|---|---|---|
| KiCad E.D.A. 8.0.8 | | Id: 5/15 |

# 1000

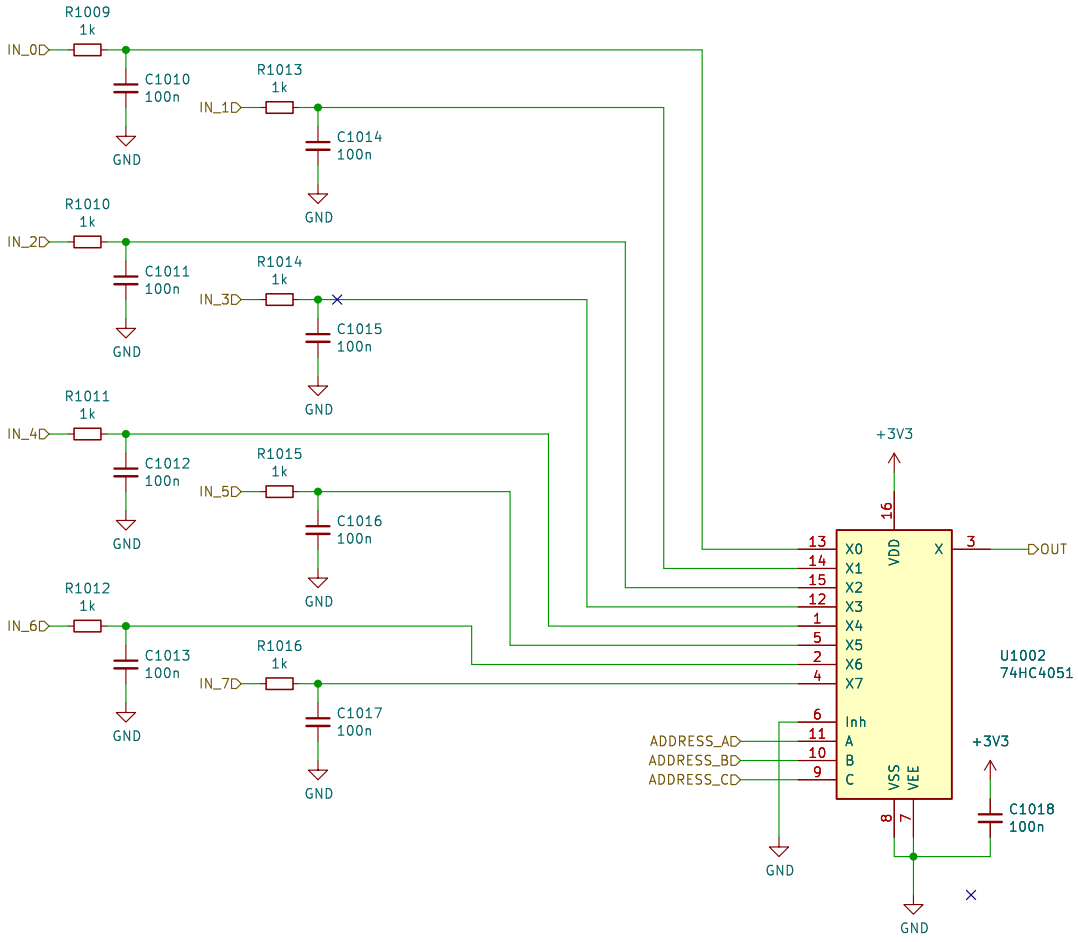


Sheet: /sheet5D8763D6/
File: UI_MUX.kicad_sch

**Title:**

| Size: A4 | Date: | Rev: |
|---|---|---|
| KiCad E.D.A. 8.0.8 | | Id: 6/15 |

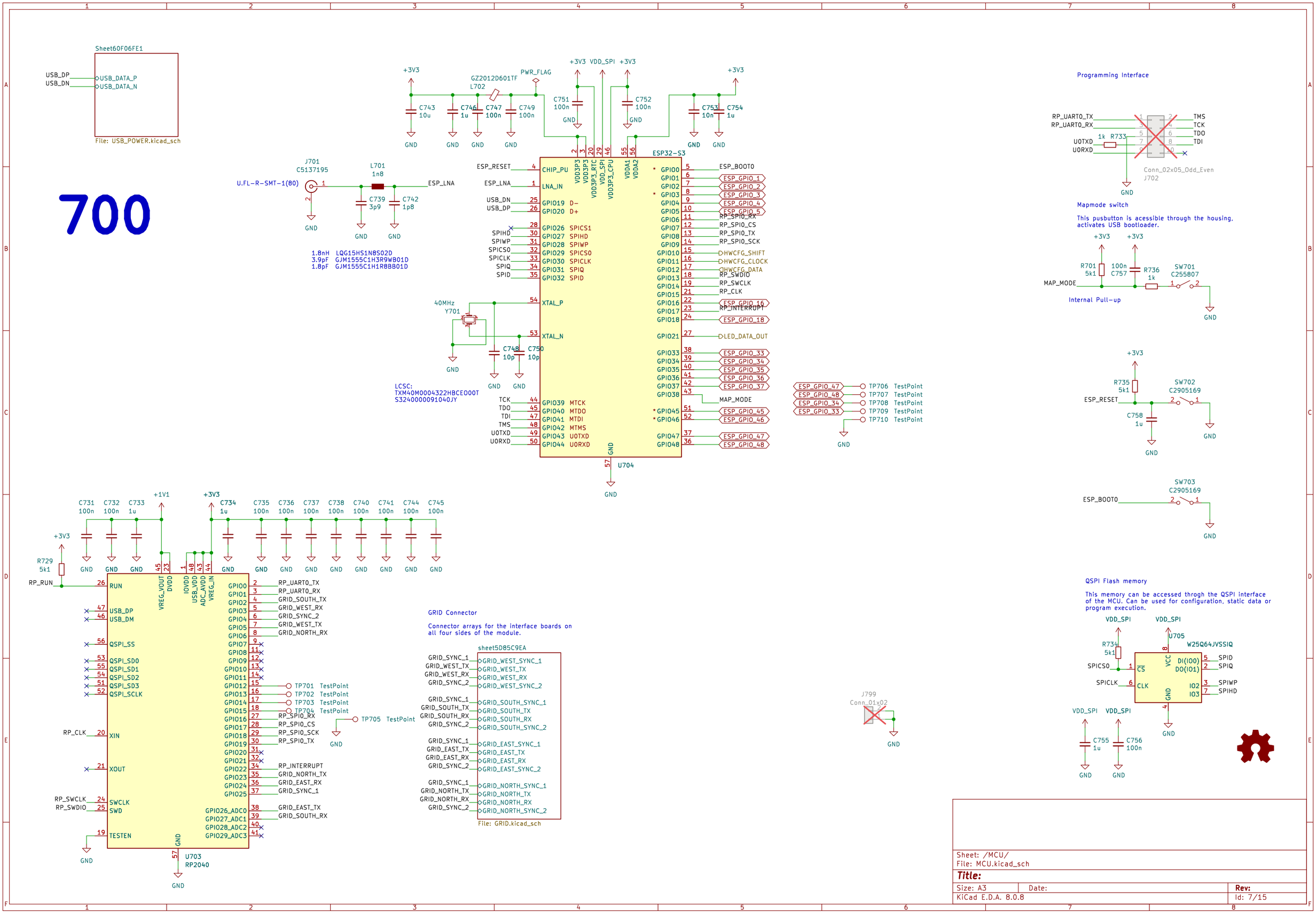


Sheet: /MCU/
File: MCU.kicad_sch

**Title:**

| Size: A3 | Date: | Rev: |
|---|---|---|
| KiCad E.D.A. 8.0.8 | | Id: 7/15 |

GRID Connector
Bi-Directional Data
2x SYNC

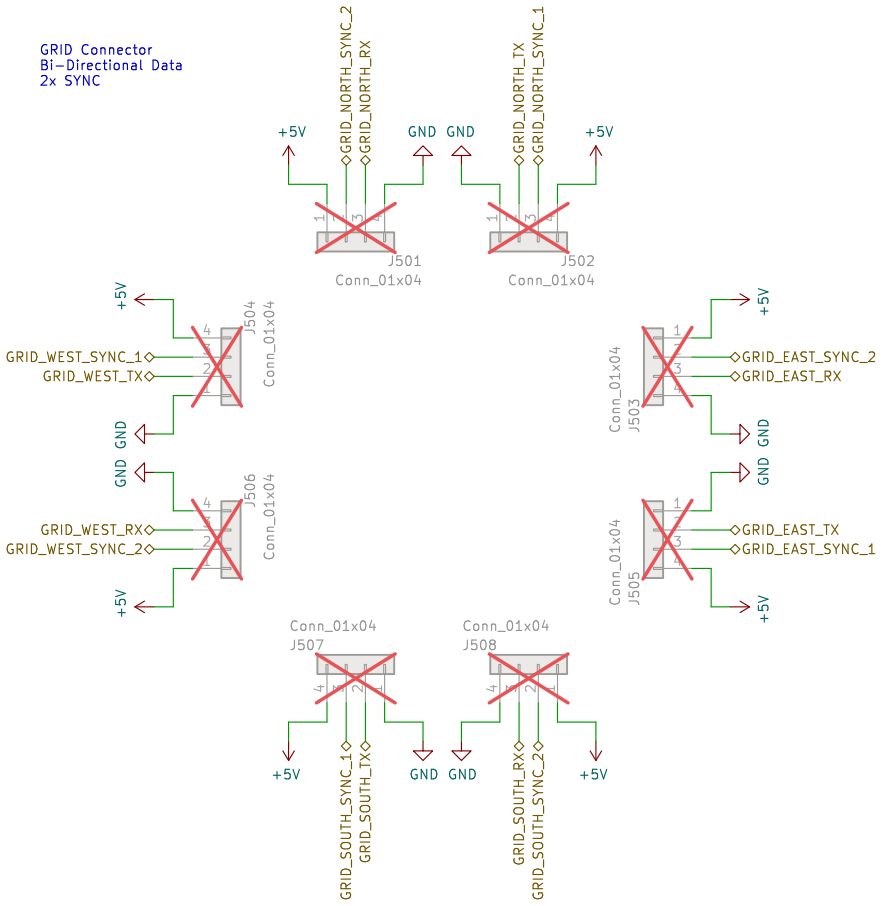


Board Mounting Pattern

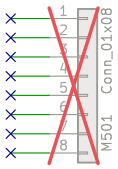


# 500

Sheet: /MCU/sheet5D85C9EA/
File: GRID.kicad_sch

**Title:**

| Size: A4 | Date: | Rev: |
|---|---|---|
| KiCad E.D.A. 8.0.8 | | Id: 8/15 |

# 600

## ESD Diodes

ESD protection for all of the externally accessible nets.

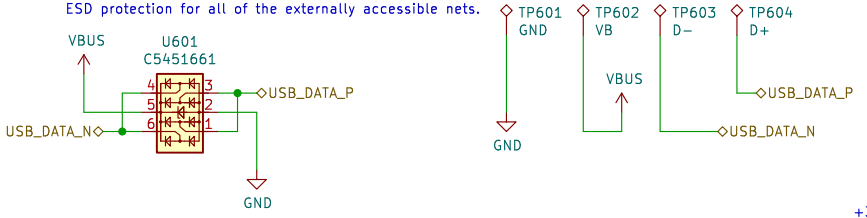


## +3V3 LDO Regulators

Regulators for generating independent power rails for the microcontroller and the user interface.

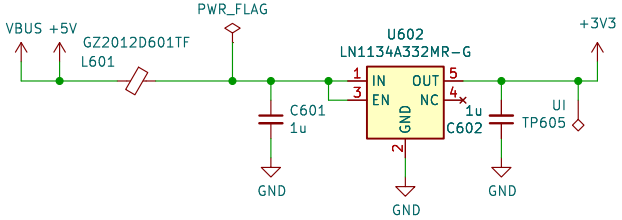


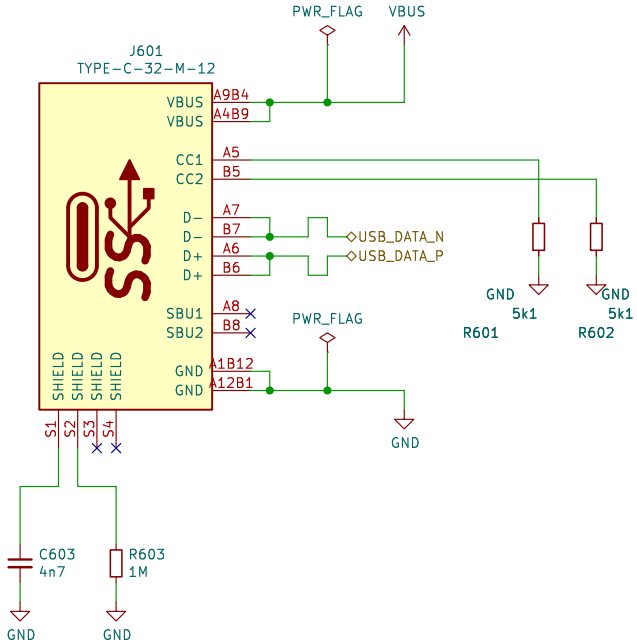


| | | |
|---|---|---|
| Sheet: /MCU/Sheet60F06FE1/ | | |
| File: USB_POWER.kicad_sch | | |
| **Title:** | | |
| Size: A4 | Date: | **Rev:** |
| KiCad E.D.A. 8.0.8 | | Id: 9/15 |

# 800

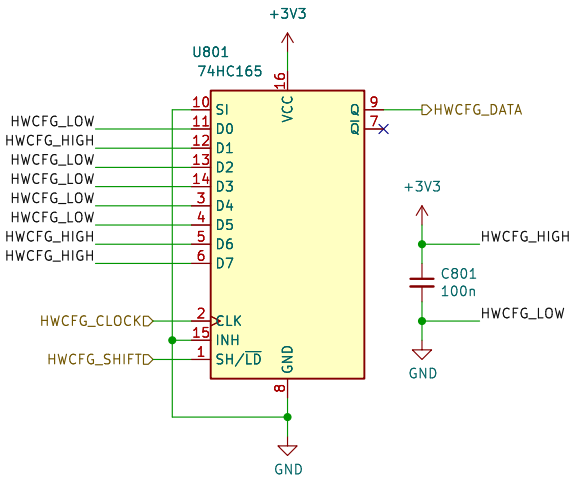


Board Identification

Grid firmware can identify the hardware and the board revision thorugh a 3 wire serial interface using one or more shift register as read only memory. The content of the memory is defined by pulling the inputs high or low through pcb traces or solderable configuration jumpers.

4b'Model + 4b'Revision + nb'Reserved (Multiple shift registers)

D0: MODEL (LSB)
D1: MODEL
D2: MODEL
D3: MODEL (MSB)
D4: REVISION (LSB)
D5: REVISION
D6: REVISION
D7: REVISION (MSB)

Model Codes (D3–D0):

Po16 0000
Bo16 0001
PBF4 0010
EN16 0011
...

Revision Codes (D7–D4):

RevA 0000
RevB 0001
RevC 0010
RevD 0011
...

| | | |
|---|---|---|
| Sheet: /HWCFG/<br>File: HWCFG.kicad_sch | | |
| **Title:** | | |
| Size: A4 | Date: | **Rev:** |
| KiCad E.D.A. 8.0.8 | | Id: 10/15 |

simulation

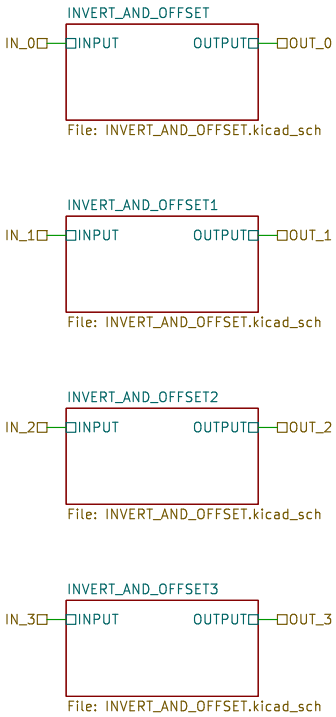


Sheet: /UI_HALL_PREAMP/
File: UI_HALL_PREAMP.kicad_sch

**Title:**

| Size: A4 | Date: | **Rev:** |
|---|---|---|
| KiCad E.D.A. 8.0.8 | | Id: 11/15 |

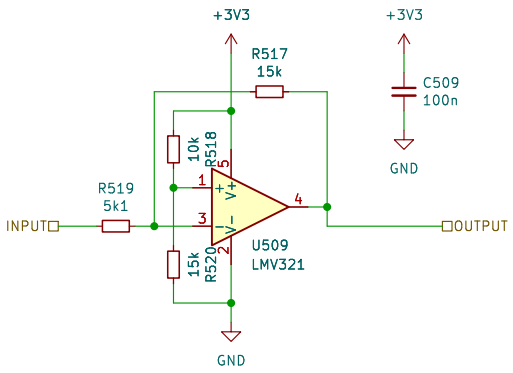


Sheet: /UI_HALL_PREAMP/INVERT_AND_OFFSET/
File: INVERT_AND_OFFSET.kicad_sch

**Title:**

| Size: A4 | Date: | **Rev:** |
|---|---|---|
| KiCad E.D.A. 8.0.8 | | Id: 16/15 |

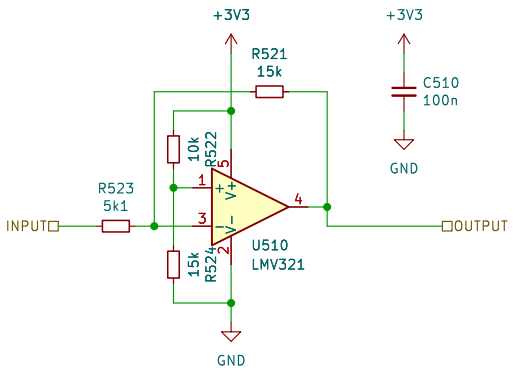


Sheet: /UI_HALL_PREAMP/INVERT_AND_OFFSET1/
File: INVERT_AND_OFFSET.kicad_sch

**Title:**

| Size: A4 | Date: | **Rev:** |
|---|---|---|
| KiCad E.D.A. 8.0.8 | | Id: 17/15 |

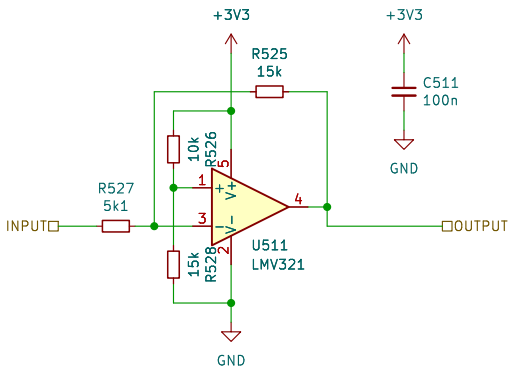


Sheet: /UI_HALL_PREAMP/INVERT_AND_OFFSET2/
File: INVERT_AND_OFFSET.kicad_sch

**Title:**

| Size: A4 | Date: | **Rev:** |
|---|---|---|
| KiCad E.D.A. 8.0.8 | | Id: 18/15 |

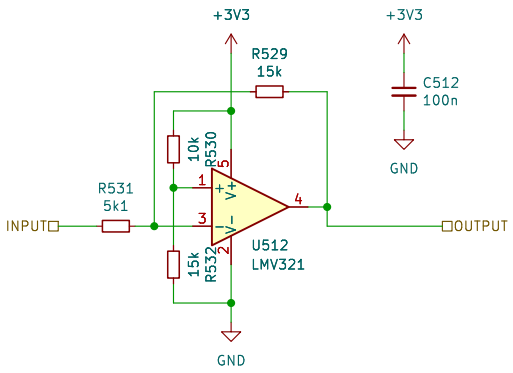


Sheet: /UI_HALL_PREAMP/INVERT_AND_OFFSET3/
File: INVERT_AND_OFFSET.kicad_sch

**Title:**

| Size: A4 | Date: | **Rev:** |
|---|---|---|
| KiCad E.D.A. 8.0.8 | | Id: 19/15 |