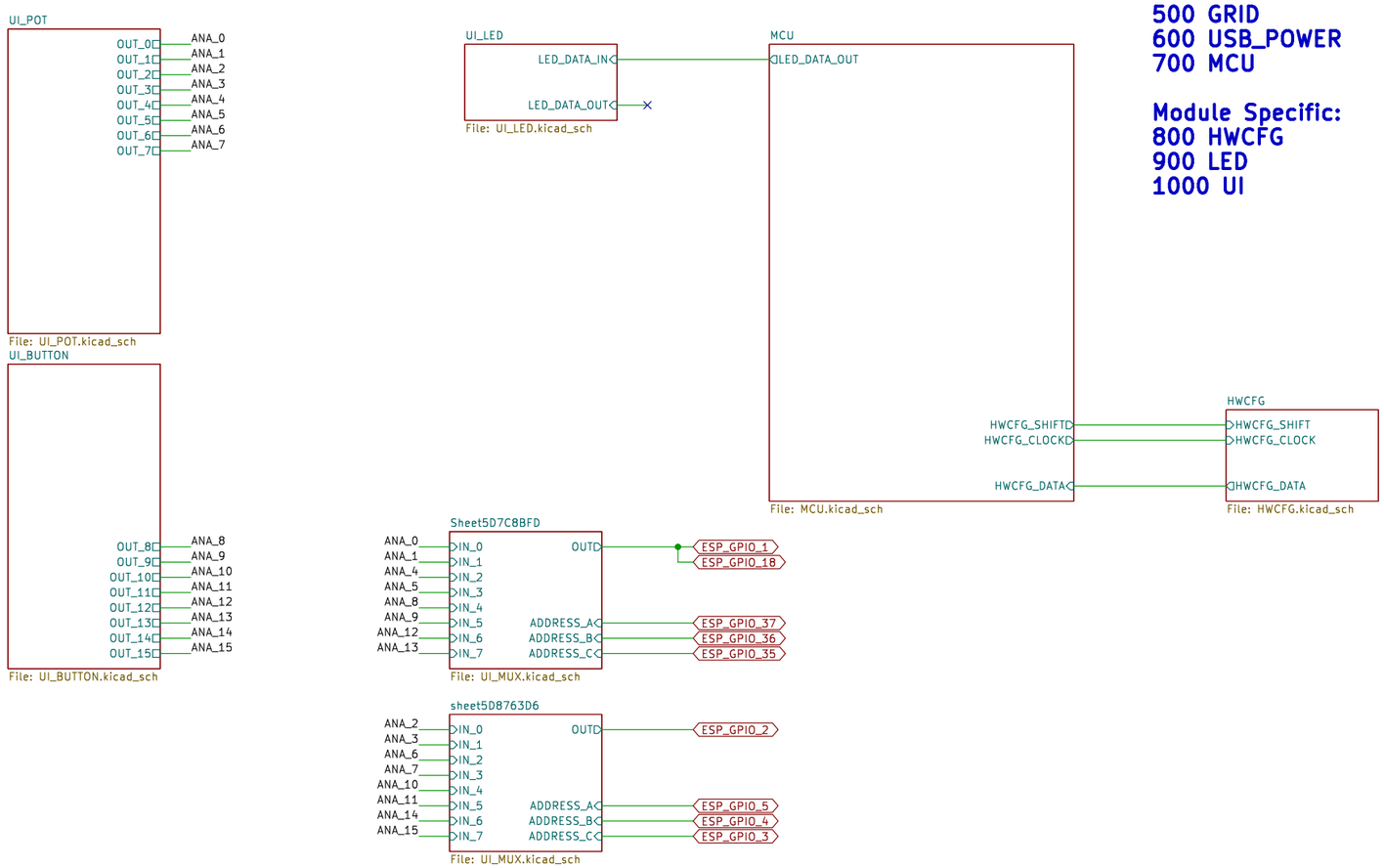

Common Sheets:
500 GRID
600 USB_POWER
700 MCU

Module Specific:
800 HWCFG
900 LED
1000 UI

Sheet: /
File: PCBA-TEK2.kicad_sch

Title:

Size: A3	Date:	Rev:
KiCad E.D.A. 8.0.8		Id: 1/10

1000

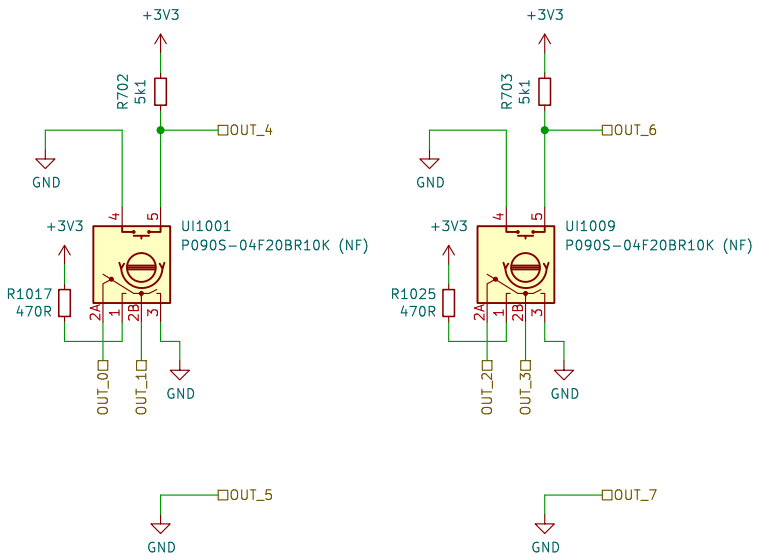

Sheet: /UI_POT/
File: UI_POT.kicad_sch

Title:

Size: A4	Date:	Rev:
KiCad E.D.A. 8.0.8		Id: 2/10

1000

Simulation:

http://tinyurl.com/y229mty4

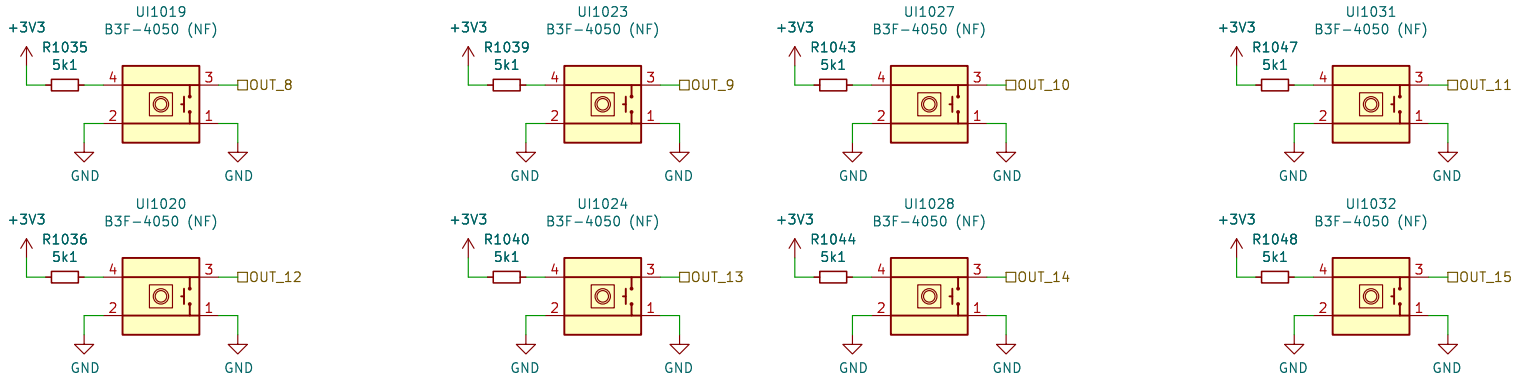

Sheet: /UI_BUTTON/
File: UI_BUTTON.kicad_sch

Title:

Size: A4	Date:	**Rev:**
KiCad E.D.A. 8.0.8		Id: 3/10

900

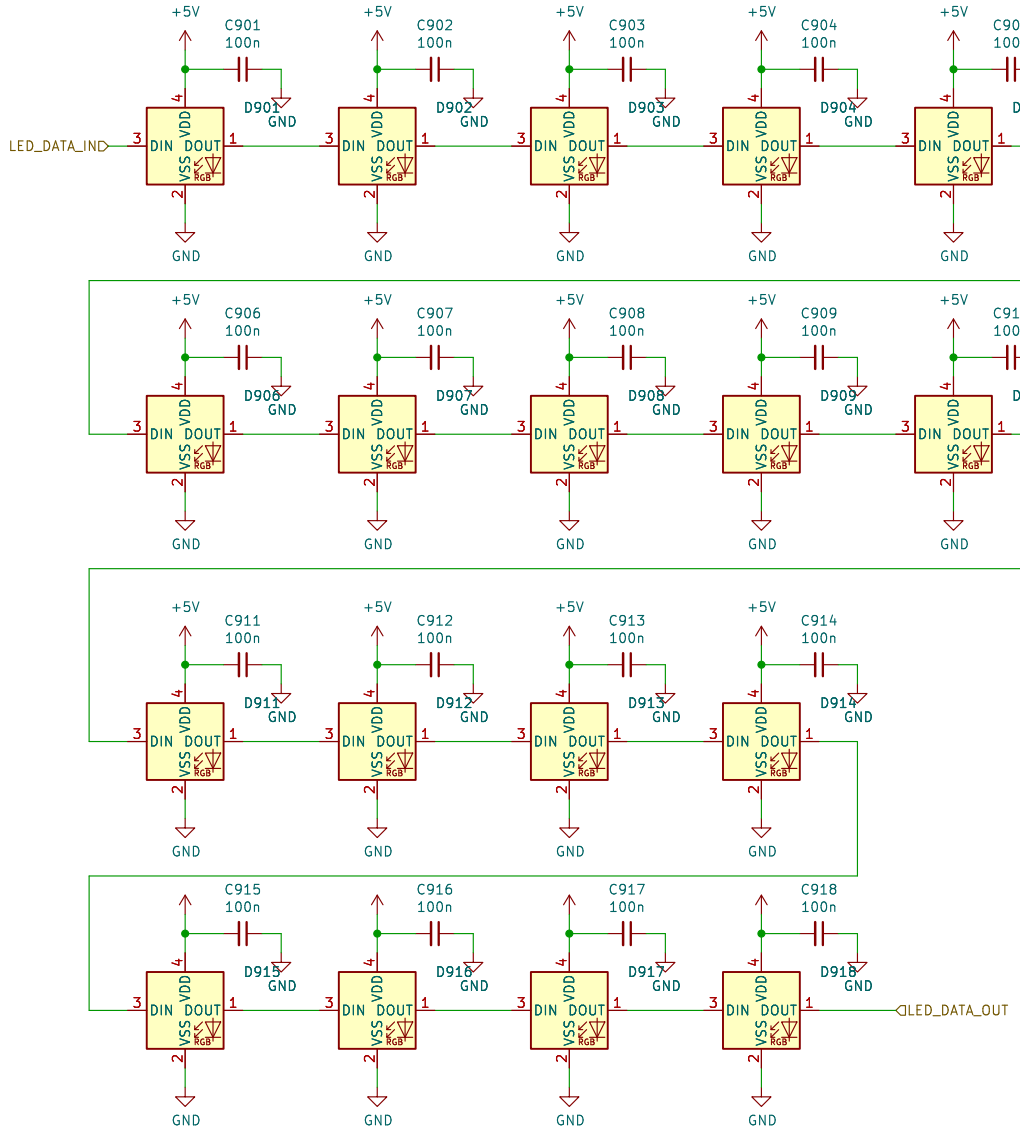

Sheet: /UI_LED/
File: UI_LED.kicad_sch

Title:

Size: A4	Date:	Rev:
KiCad E.D.A. 8.0.8		Id: 4/10

1000

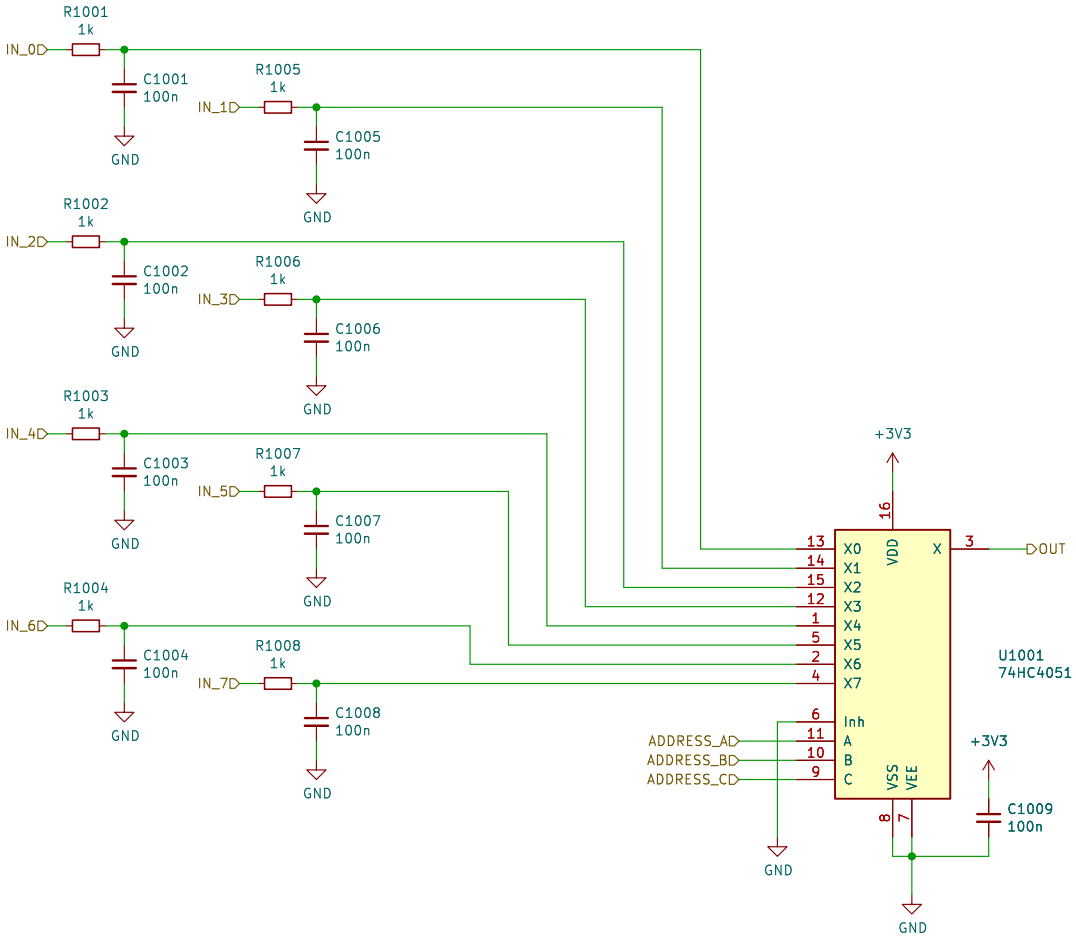

Sheet: /Sheet5D7C8BFD/
File: UI_MUX.kicad_sch

Title:

Size: A4	Date:	Rev:
KiCad E.D.A. 8.0.8		Id: 5/10

1000

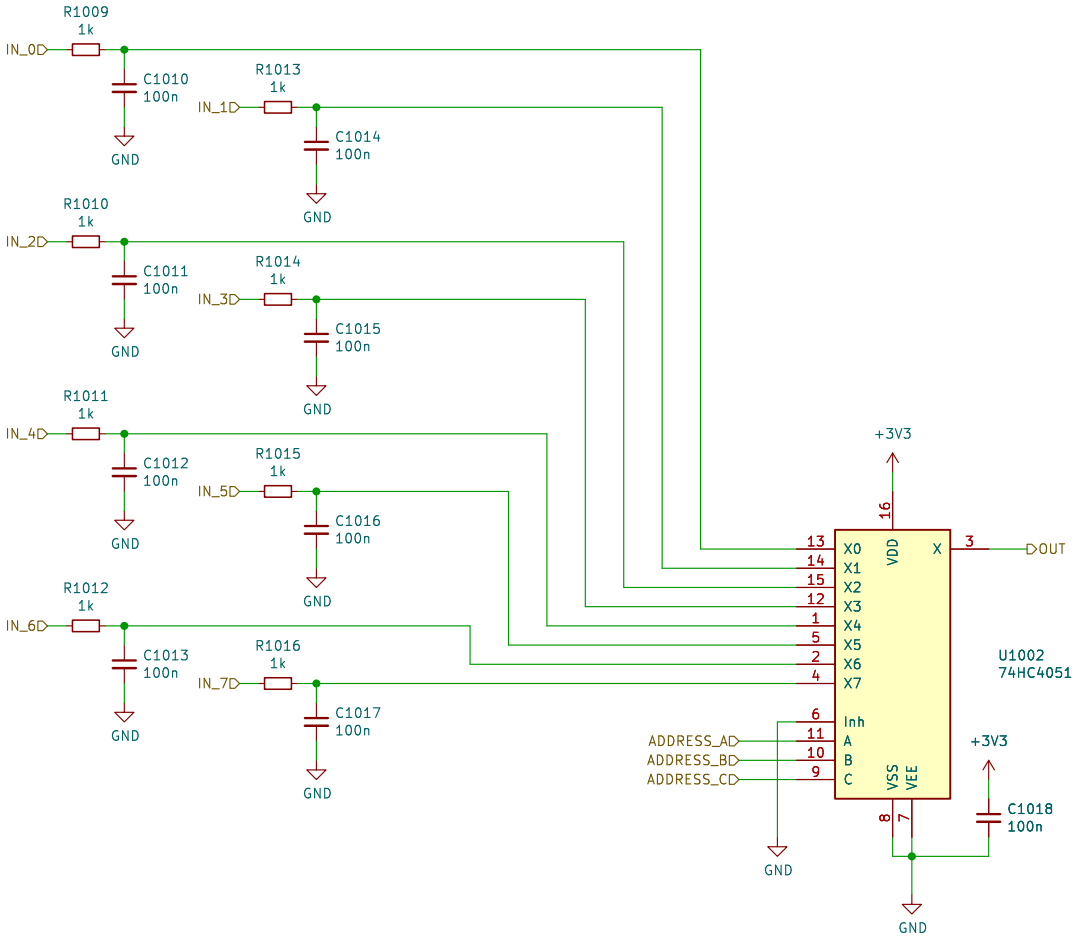

Sheet: /sheet5D8763D6/
File: UI_MUX.kicad_sch

Title:

Size: A4	Date:	Rev:
KiCad E.D.A. 8.0.8		Id: 6/10

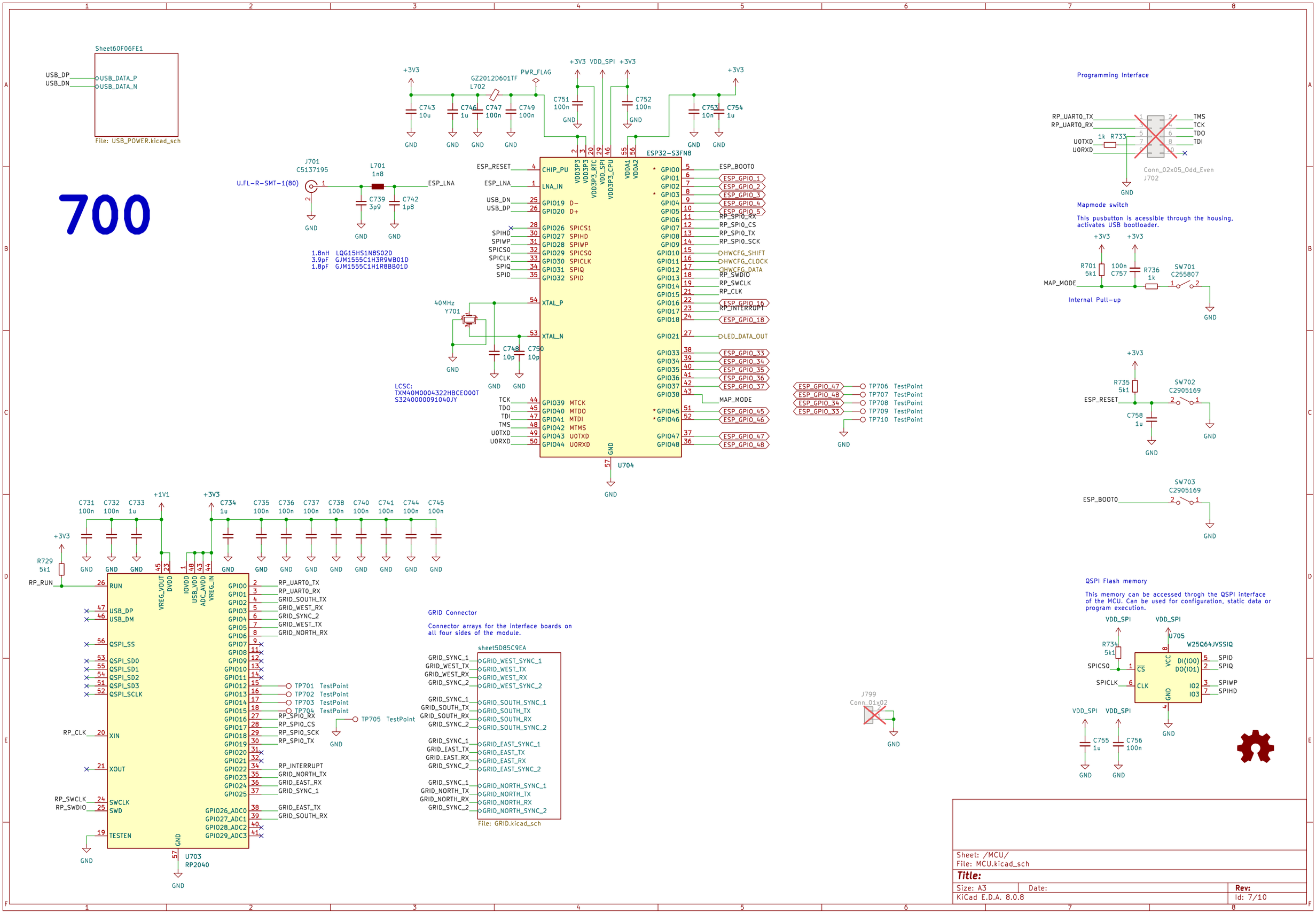

Sheet: /MCU/
File: MCU.kicad_sch

Title:

Size: A3	Date:	Rev:
KiCad E.D.A. 8.0.8		Id: 7/10

GRID Connector
Bi-Directional Data
2x SYNC

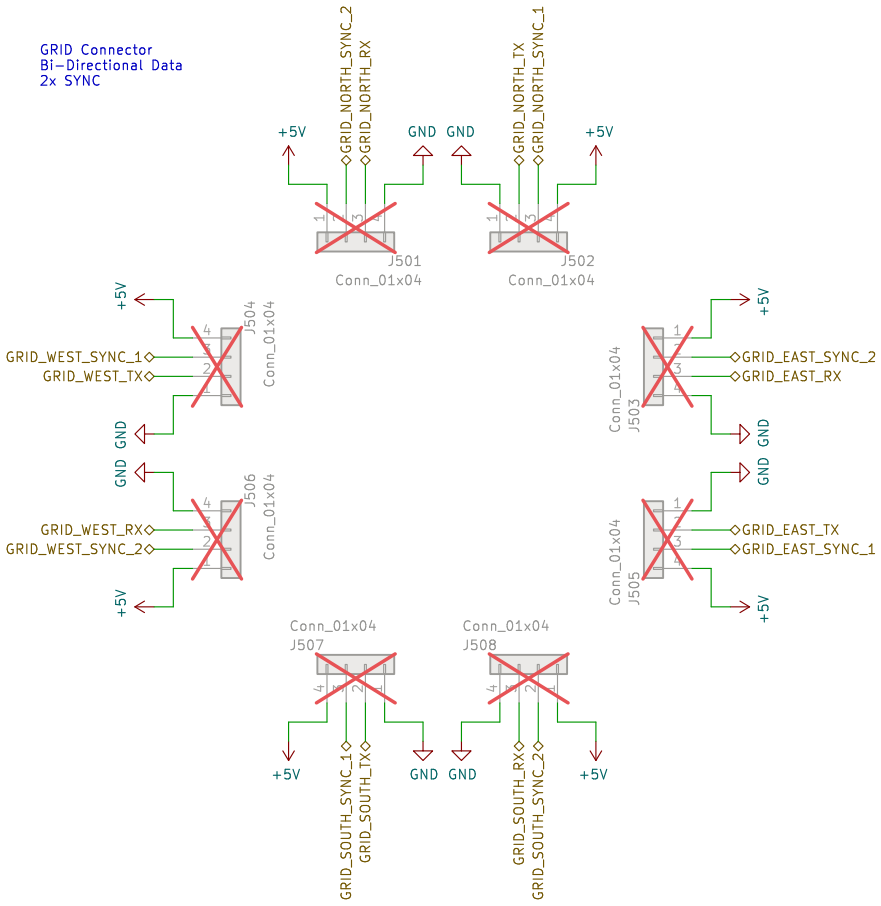

Board Mounting Pattern

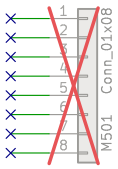

500

Sheet: /MCU/sheet5D85C9EA/
File: GRID.kicad_sch

Title:

Size: A4	Date:	**Rev:**
KiCad E.D.A. 8.0.8		Id: 8/10

600

ESD Diodes

ESD protection for all of the externally accessible nets.

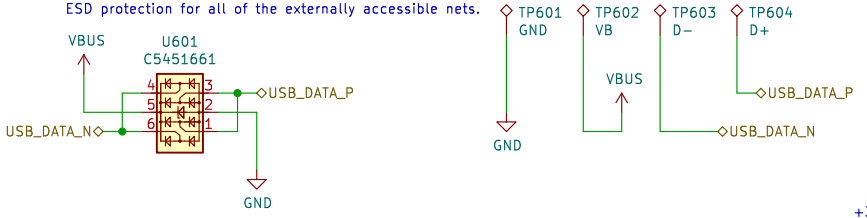

+3V3 LDO Regulators

Regulators for generating independent power rails for the microcontroller and the user interface.

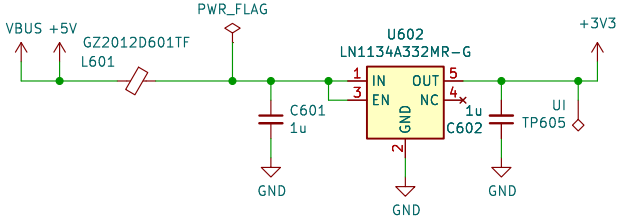

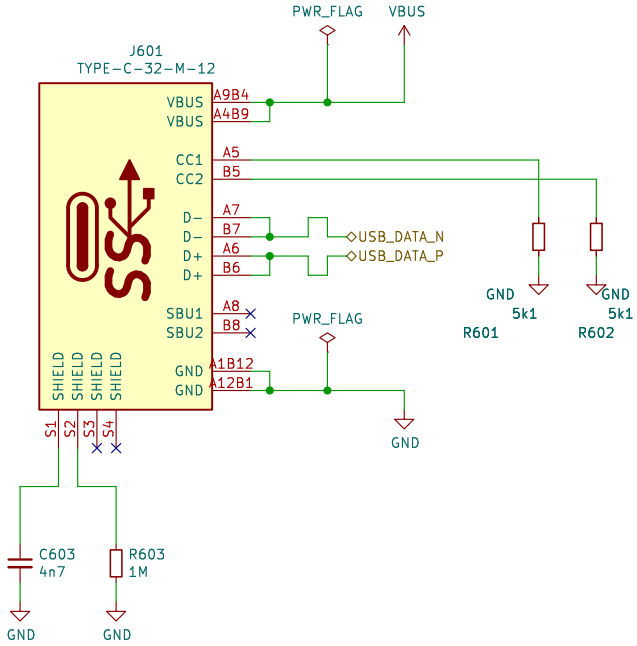

Sheet: /MCU/Sheet60F06FE1/		
File: USB_POWER.kicad_sch		
Title:		
Size: A4	Date:	**Rev:**
KiCad E.D.A. 8.0.8		Id: 9/10

800

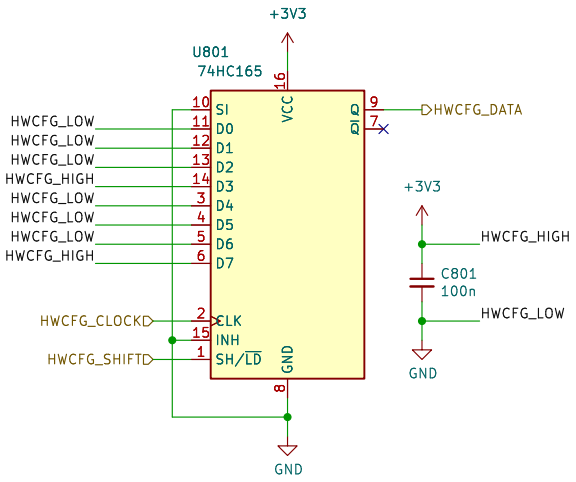

Board Identification

Grid firmware can identify the hardware and the board revision thorugh a 3 wire serial interface using one or more shift register as read only memory. The content of the memory is defined by pulling the inputs high or low through pcb traces or solderable configuration jumpers.

4b'Model + 4b'Revision + nb'Reserved (Multiple shift registers)

D0: MODEL (LSB)
D1: MODEL
D2: MODEL
D3: MODEL (MSB)
D4: REVISION (LSB)
D5: REVISION
D6: REVISION
D7: REVISION (MSB)

Model Codes (D3–D0):

Po16 0000
Bo16 0001
PBF4 0010
EN16 0011
...

Revision Codes (D7–D4):

RevA 0000
RevB 0001
RevC 0010
RevD 0011
...

Sheet: /HWCFG/ File: HWCFG.kicad_sch		
Title:		
Size: A4	Date:	**Rev:**
KiCad E.D.A. 8.0.8		Id: 10/10